Study Unit

Brakes, Wheel Assemblies, and Tires

By

Ed Abdo

About the Author

Edward Abdo has been actively involved in the motorcycle and ATV industry for more than 25 years. He received factory training from Honda, Kawasaki, Suzuki, and Yamaha training schools. He has worked as a motorcycle technician, service manager, and Service/Parts department director.

After being a chief instructor for several years, Ed is now the Curriculum Development Manager for the Motorcycle Mechanics Institute in Phoenix, Arizona. He is also a contract instructor and administrator for American Honda's Motorcycle Service Education Department.

Preview

In this study unit, you'll learn about the brake systems, wheels, and tires used on motorcycles and ATVs. You'll begin by learning about the different types of brakes. We'll describe how each type of brake operates and identify its components. We'll also describe how to maintain the different brake systems. Next, we'll look at the wheels commonly found on motorcycles and ATVs. In this discussion, we'll cover both the spoke and non-spoke types of wheels used on motorcycles. In addition, you'll learn how to repair spoke-type wheels. The tire information includes both tube-type and tubeless-type tires. We'll provide information for tire repair as well as information for tire removal, installation, and balancing.

When you complete this study unit, you'll be able to

- Identify the different brake systems and brake system components used on motorcycles and ATVs
- Describe how to perform maintenance on brake systems
- Understand how to repair motorcycle spoke wheels
- Identify tube and tubeless tires
- Describe how to perform maintenance on wheel assemblies, including balancing tires and servicing wheel bearings

Contents

Brakes, Wheel Assemblies, and Tires

INTRODUCTION

Two very important areas of safety for motorcycles and ATVs are braking systems and tires. Better brakes and tires are constantly being developed to keep up with vehicles that are being designed to be more powerful and easier to handle over a wide variety of conditions.

As a motorcycle and ATV technician, you'll often be called upon to adjust, repair, and replace tires, wheels, and brakes. These jobs can be very difficult for a novice technician; however, a few simple procedures, such as those you'll learn in this study unit, can do a lot to help speed up these jobs and avoid problems.

The procedures in this study unit are general in nature and not intended to be used for actual disassembly and repair. Their purpose is to familiarize you with the types of activities you'll encounter. Always refer to the appropriate motorcycle or ATV service guide for maintenance information. The service guide contains all the information to do the job correctly, including detailed instructions for the specific make and model of motorcycle or ATV, special tools, and service tips. Above all, the service guide contains the appropriate safety information.

BRAKING SYSTEMS

The braking systems used on motorcycles and ATVs, like virtually any type of braking system, reduce the machine's kinetic energy by transforming it into heat energy known as *friction heat*. Therefore, a brake is an energy-conversion device that converts the energy of motion (kinetic energy) into heat energy. Motorcycle braking is accomplished by the friction (resistance to movement) produced when a brake lining is forced against a rotating drum or disc. Friction between the linings and drum or disc serve to slow and eventually stop wheel rotation.

The brakes used on motorcycles fall into two categories:

- Mechanical drum, sometimes called expanding shoe
- Hydraulic disc

Motorcycle brakes commonly use either hydraulic (fluid pressure) or mechanical (cable or linkage) mechanisms to apply the brakes.

Mechanical Drum Brakes

First, let's look at the drum brake, sometimes called the mechanical, expanding double-shoe brake (Figure 1). Generally used for rear wheels, this brake is also used on some front wheels. With this kind of brake, a *backing plate* that's connected to the forks holds the two brake shoes. The wheel and brake drum rotate around the brake shoes. When the rider applies the brake, a cam pushes the two semicircular shoes outward. The circle formed by the two shoes expands. When the shoes expand, they press against the rotating drum, thereby limiting its free rotation.

FIGURE 1—A drum brake is shown in this illustration. (Copyright by American Honda Motor Co., Inc. and reprinted with permission)

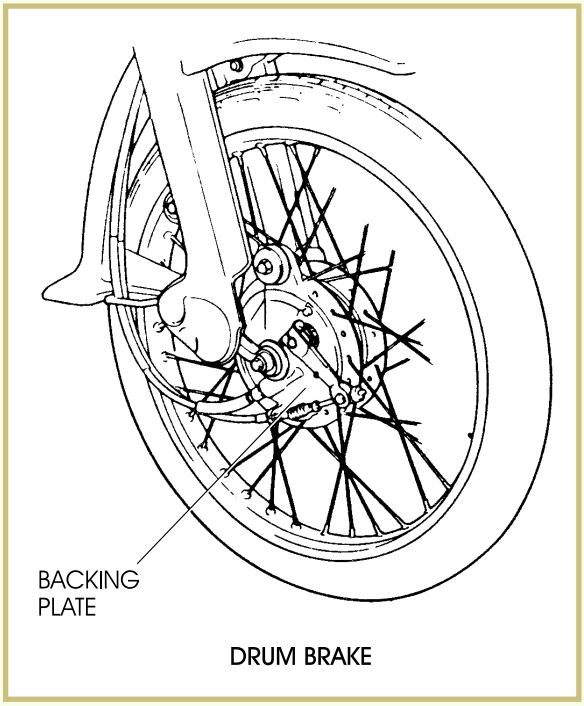

Types of Mechanical Drum Brakes

Mechanical drum brakes may use either one or two cams to expand the shoes. In the one-cam arrangement, sometimes called a *one-leading-shoe-and-one-trailing-shoe* brake system, springs hold one end of the shoe to the cam. The other end is anchored to a round peg or pivot. Turning the elliptical cam spreads the shoes. Figure 2 illustrates the leading-shoe arrangement.

The leading shoe makes contact with the drum at Point A. Wheel rotation draws the shoe tighter into the drum. The trailing shoe makes contact at Point B, but the motion of the wheel tends to push the shoe away from the drum. In other words, the rotation of the drum helps the leading shoe develop braking power, whereas the opposite is true in the case of the trailing shoe.

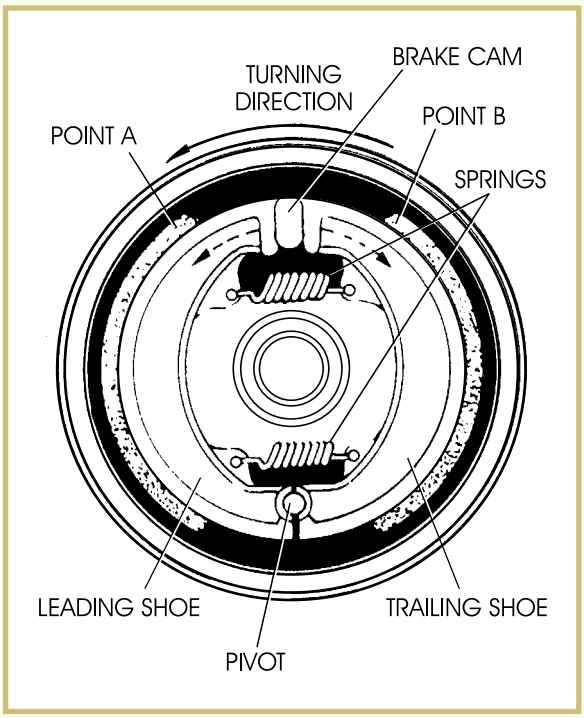

FIGURE 2—Shown here are the internal components of the one-leading-shoe-and-one-trailing-shoe drum-brake system.

Figure 3 illustrates the *double-leading-shoe* brake system. In this system, a cam is used at both ends of the shoes. Therefore, expansion is equal at each end of each shoe. The double-leading-shoe system requires less pressure to operate because the shoes expand equally around the drum, and the rotation of the drum pulls the leading edge of each brake shoe tighter against the drum.

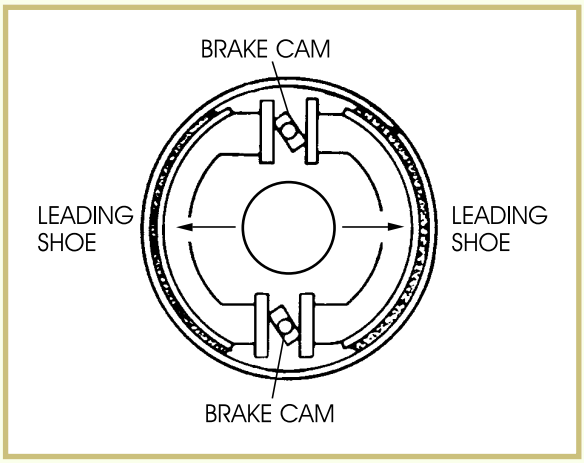

FIGURE 3—Shown here is a double-leading-shoe drum-brake system.
(Copyright by American Honda Motor Co., Inc. and reprinted with permission)

Servicing Drum-Type Brakes

The service required for drum-type brakes is generally quite simple. Usually, the only problems that occur are

- Not stopping the wheel
- Not releasing the wheel (also called *brake drag*)

Not Stopping the Wheel. This can be caused by worn brake shoes or brake lining contamination. Contamination may be caused by a leaking fork seal. If the brake is worn, replace the shoes or the shoe lining. If there is oil contamination, wash it off using a high-flashpoint solvent.

Not Releasing the Wheel. Brake drag can be caused by

- Brake adjustment being too tight
- Broken return springs
- Lack of lubrication on the cam and pedal pivot points

Brake cams should be serviced (lubricated) every 5,000 miles under normal conditions and more often if the motorcycle is operated under wet or dirty conditions. Use care when lubricating brake components so that you don't allow oil or grease to contaminate the lining.

Hydraulic Disc Brakes

The other category of brake systems is the disc type (Figure 4). Disc brakes are commonly used on both front wheels and rear wheels. Disc brakes use two pads that clamp on the sides of a disc to stop wheel rotation. The clamping action is normally caused by hydraulic pressure moving the pads together. Some older motorcycle models use mechanical disc brakes that have the disc connected to the wheel and positioned between the pads. As pressure is applied to the pads, they squeeze the disc, preventing its turning.

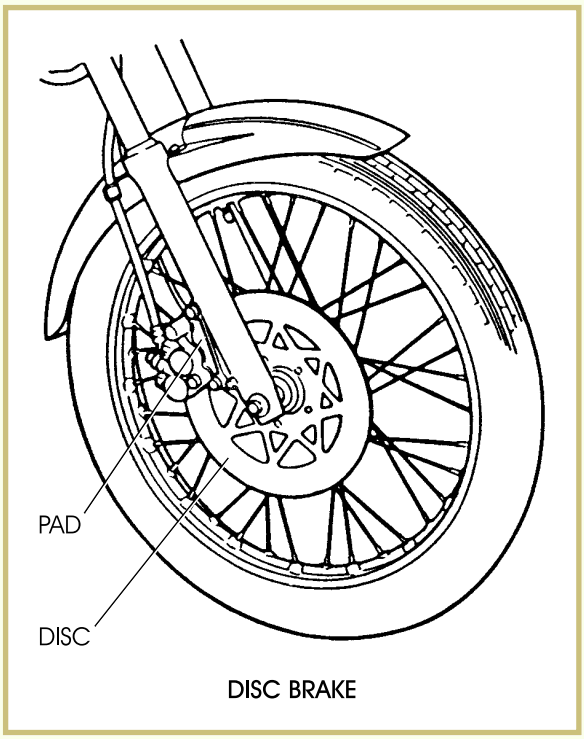

FIGURE 4—A typical disc brake mounted on the front wheel of a motorcycle. (Copyright by American Honda Motor Co., Inc. and reprinted with permission)

Hydraulic Disc Brake Components

The major components of a hydraulic disc brake are the

- Brake lever
- Master cylinder
- Hydraulic brake lines
- Brake fluid
- Caliper assembly
- Brake pads
- Brake discs

Let's take a closer look at each component.

Brake Lever

Operation. The brake lever is connected to the master cylinder (Figure 5). As the rider moves the lever, a piston in the cylinder moves and forces fluid to flow from the master cylinder to the caliper assembly. Here the pressure of moving fluid causes the pads to grip the disc, thereby stopping wheel rotation.

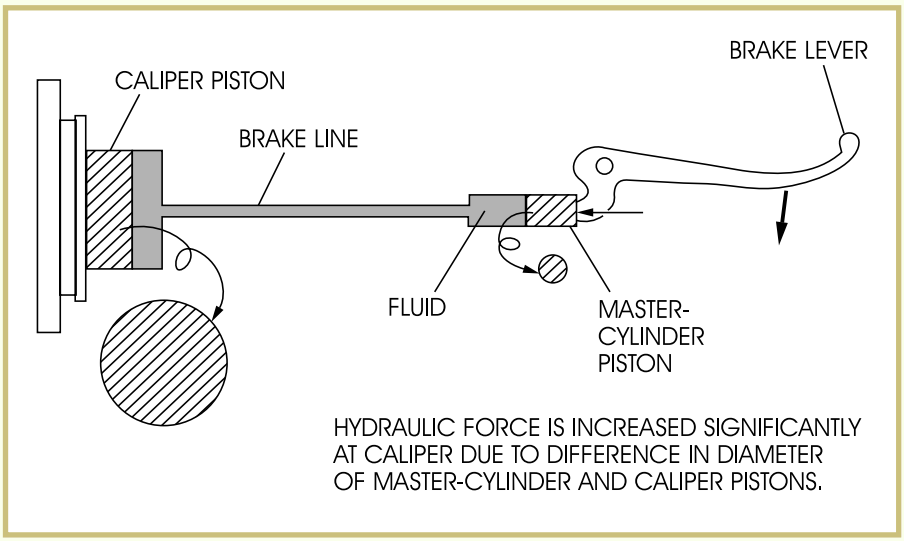

FIGURE 5—This illustration shows the brake lever and master-cylinder piston applying pressure to the caliper piston. (Copyright by American Honda Motor Co., Inc. and reprinted with permission)

When the brake lever is released, a spring moves the lever and master-cylinder piston back to their starting positions. This relieves the fluid pressure and the pads move away from the disc, freeing the wheel.

Inspection and Maintenance. Check that the brake lever is properly secured but doesn't bind during operation. The brake lever should return to its outward position when released.

Master Cylinder

Operation. The master cylinder is connected to the brake lever. An exploded view of a master-cylinder assembly is shown in Figure 6.

Inspection and Maintenance. Master-cylinder component repair consists of disassembly, inspecting all parts, replacing any parts that show signs of damage or wear, and reassembly. Internal parts can cause trouble if they become worn or rusty.

Hydraulic Brake Lines

Operation. Hydraulic brake lines connect the master cylinder and the brake caliper. When the rider applies pressure to the brake lever, the master cylinder converts the force applied on the brake lever to hydraulic pressure. This hydraulic pressure passes through the hydraulic brake lines from the master cylinder to the caliper assembly. The increased pressure causes the brake-caliper piston to force the brake pad against the disc, which stops the wheel.

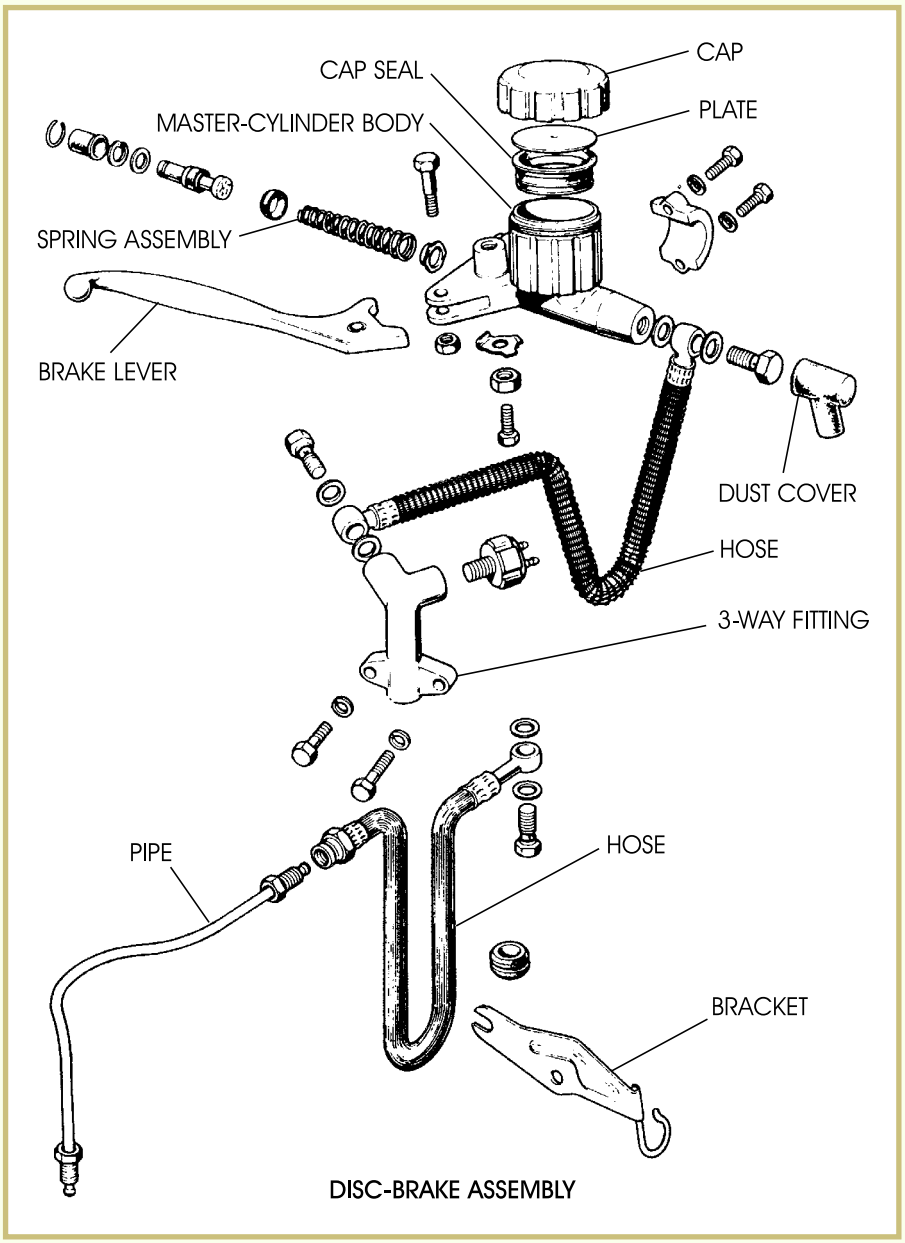

FIGURE 6—A hydraulic disc brake master cylinder is shown here in exploded view form. (Copyright by American Honda Motor Co., Inc. and reprinted with permission)

Inspection and Maintenance. Always install new sealing washers when the hydraulic brake line is removed or replaced (Figure 7).

Brake Fluid

Operation. Hydraulic brake systems commonly use three types of brake fluid, which have been rated by the U. S. Department of Transportation (DOT). These brake fluids are designated as DOT 3, DOT 4, and DOT 5. First, we'll discuss DOT 3 and DOT 4, which are both glycol-based brake fluids. DOT 4 brake fluid can be mixed with and used in place of DOT 3. DOT 3 shouldn't be used in place of DOT 4 because DOT 4 has a higher boiling point than DOT 3. DOT 4 is normally found in motorcycles that use metallic or semimetallic brake

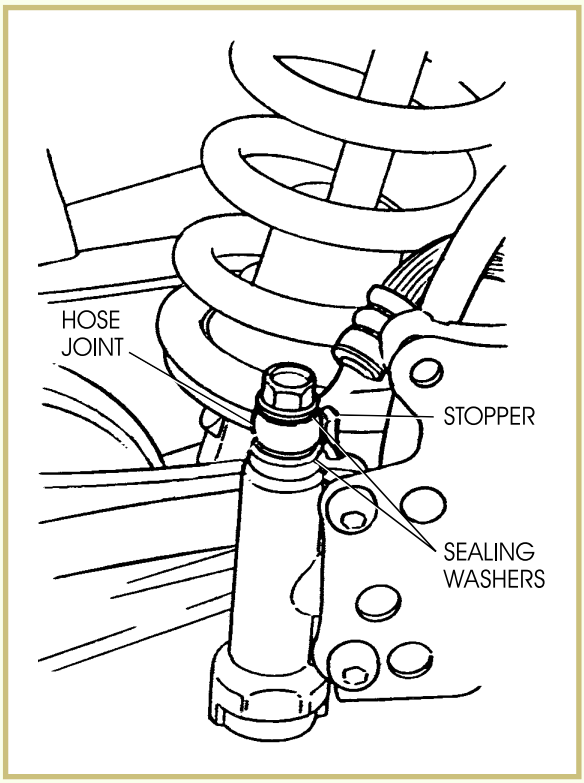

FIGURE 7—The brake line sealing washers should be replaced whenever the brake line has been removed. (Copyright by American Honda Motor Co., Inc. and reprinted with permission)

pads, which generate higher braking temperatures. When there's a higher than normal brake temperature, loss of braking could occur.

Both DOT 3 and DOT 4 brake fluids are *hydroscopic*. This means that they absorb moisture from the atmosphere. This is very important because the moisture contaminates the brake fluid, which in turn lowers the fluid's boiling point and may lead to corrosion in the master cylinder and brake caliper. DOT 3 and DOT 4 brake fluids are harmful to plastic and painted parts, so you must use extreme care when draining or adding these brake fluids to the master cylinder.

DOT 5 brake fluid is a silicon-based fluid. Water or moisture won't mix with DOT 5 brake fluid. DOT 5 can't be mixed with DOT 3 or DOT 4 brake fluid. A disadvantage that DOT 5 fluid has in relation to DOT 3 or DOT 4 is that it emulsifies (foams) very easily; therefore, be careful not to shake the container. DOT 5 also has additives that counteract the fluid's tendency to make the seals swell. It's important to understand that these brake additives impregnate the seals in the brake system. If you change from one type of fluid to another, you must replace the seals and all rubber parts to prevent brake-system failure. It's also important to use only fresh brake fluid from a sealed container to avoid contaminating the brake system. See Table 1 for a comparison of brake-fluid characteristics.

Table 1

BRAKE-FLUID COMPARISON

Characteristic	DOT 3	DOT 4	DOT 5
Chemical Base	Glycol	Glycol	Silicon
Hygroscopic (absorbs moisture from the atmosphere)	Yes	Yes	No
Compatibility	Can't mix with or replace DOT 4 or DOT 5 Boiling point is lower than DOT 4	Can mix with and replace DOT 3 Boiling point is higher than DOT 3	Can't mix with or replace DOT 3 or DOT 4
Precautions	Harmful to plastic and painted surfaces	Harmful to plastic and painted surfaces	Foams easily Has additives that counteract the tendency to make seals swell

Inspection and Maintenance. Hydraulic brake fluid in disc-brake systems should be changed once a year or every 5,000 to 6,000 miles, whichever comes first. If the fluid becomes contaminated with dirt or water, it should be changed immediately. The following is a general procedure to change brake fluid.

1. Attach a hose to the bleeder valve on the caliper. Run the other end of the hose into a can to catch the fluid (Figure 8).
2. Open the bleeder valve and pump the brake lever until the fluid is completely drained.
3. Close the bleeder valve and fill the master-cylinder reservoir with new fluid.

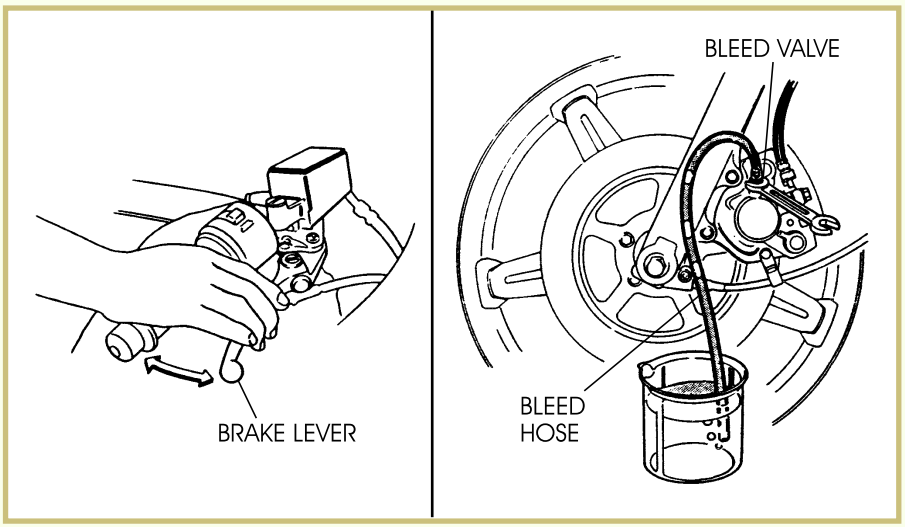

FIGURE 8—This figure illustrates the process of replacing the brake fluid. (Copyright by American Honda Motor Co., Inc. and reprinted with permission)

4. Open the bleeder valve and squeeze the brake lever; then close the bleeder valve while holding the lever depressed. Release the lever. Repeat this operation until fluid is pumped out of the hose with each squeeze of the lever. Be sure you check the reservoir before each squeeze because it shouldn't become dry. Replenish the fluid as necessary.

Bleeding Hydraulic Brake Systems. After you've changed the brake fluid you must bleed the air from the brake system. This procedure is also used whenever the brakes seem spongy, which is also an indication of air in the system. The following is a general procedure to bleed air from the brake system.

1. Connect a hose to the bleeder valve on the caliper as you did to replace the fluid.
2. After filling the reservoir, pump the brake lever a few times until the pressure becomes firm.
3. Hold the lever depressed while you open the bleeder valve. Air in the system is expelled in the form of tiny bubbles from the hose on the bleeder valve.
4. Tighten the bleeder valve before you release the brake lever.

Repeat this operation until all the air is expelled. Be sure to maintain the fluid level in the reservoir during bleeding operations. Check the fluid level often as you work.

Caliper Assembly

Operation. The caliper assembly (Figure 9) fits over the brake disc rotor. Pistons inside the calipers are in direct contact with brake pads, which press against the brake disc. The brake fluid pushes the pistons outward, which in turn pushes the pads toward the brake disc. As the pads press against the disc, the friction slows the rotation of the wheel.

Inspection and Maintenance. Inspect the caliper assembly for damage. Internal seals, pistons, and other parts of the caliper assembly must be replaced if damaged.

Two types of hydraulic calipers are used on motorcycles today—single piston and multiple piston. We'll discuss these types of calipers next.

Single-Piston Calipers. In this design, both pads press against the brake disc through a reaction of a sliding caliper yoke. Calipers of this type with single pistons are still common. A typical single-piston caliper is illustrated in Figure 10 on the left side of the illustration.

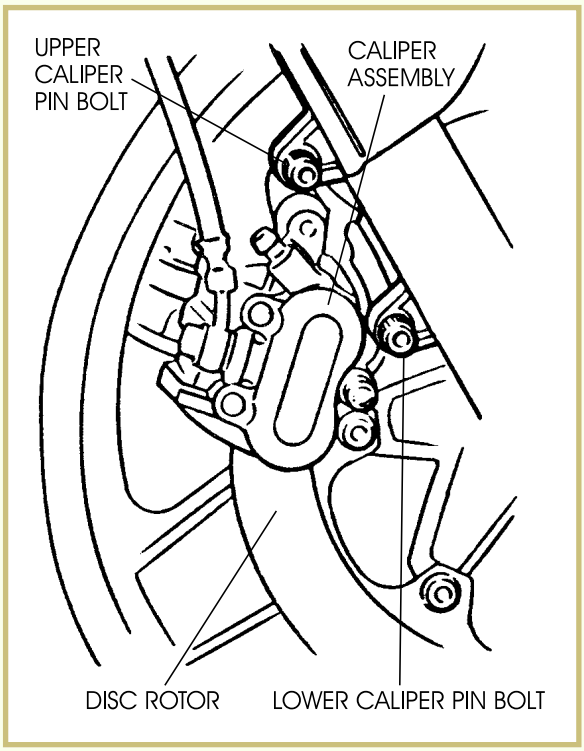

FIGURE 9—The brake caliper houses the brake pads and the pistons, which apply pressure to the pads. The caliper pin bolts secure the caliper assembly. (Copyright by American Honda Motor Co., Inc. and reprinted with permission)

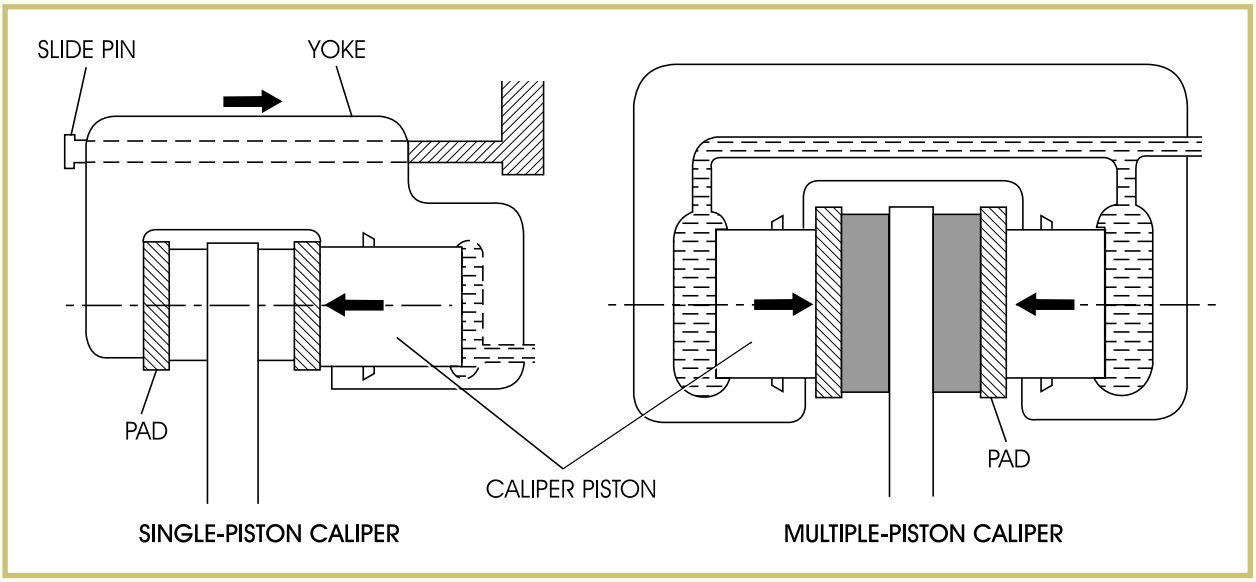

FIGURE 10—This illustration shows how the single-piston and multiple-piston calipers apply pressure to the brake pads. (Copyright by American Honda Motor Co., Inc. and reprinted with permission)

Multiple-Piston Calipers. This caliper design is the same as a single-piston caliper except that this design has two or more pushing pistons to apply braking pressure. Some designs have two, four, or even six pistons doing the same job as the single-piston caliper, but applying up to six times the force of a single-piston caliper system! Figure 10 shows a typical dual-piston caliper on the right side of the illustration.

Brake Pads

Operation. There are different designs of disc-brake pads. When they were first developed, disc-brake pads were made from asbestos. Due to the health hazards involved with asbestos, the asbestos pads were replaced with pads made from organic materials. To increase the service life of the pad, as well as to improve braking performance, these pads were sometimes impregnated with small metal particles. Today, most motorcycle manufacturers design their brake systems to use what's known as *sintered disc-brake pads*. Sintered pads are impregnated with copper as well as other special materials, which the brake-pad manufacturers keep secret. These pads are designed to improve wet-braking performance. On some of these sintered brake pads, insulation has been installed to help shield the hydraulic brake fluid from brake-pad heat when the brakes are under heavy use.

Inspection and Maintenance. Inspect the pads for wear. A mark on the pad, placed by the manufacturer, indicates the allowable wear point (Figure 11). If the pad is worn beyond the mark, replace both pads to prevent unequal pressure on the disc. If oil or grease has been spilled on the pads, they should be cleaned or replaced. If pads need to be replaced, always replace in sets; never replace just one brake pad.

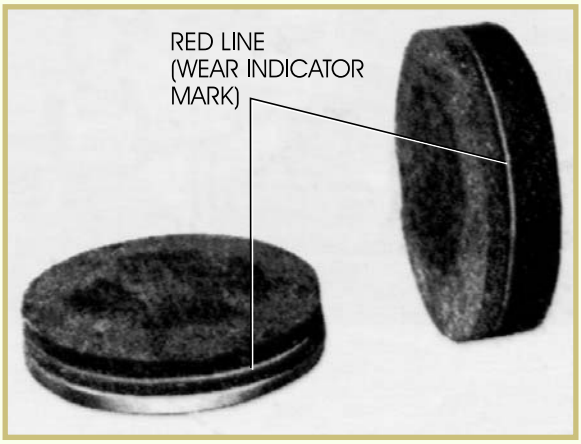

FIGURE 11—Marks placed on the brake pads let you know when it's time to replace the brake pads.

Brake Discs

Materials. To help protect them from rust, most brake discs (also known as *rotors*) are made from a stainless-steel alloy. Other brake discs are made from cast iron. The cast-iron discs transfer heat better than the stainless-steel discs, but rust when exposed to water. The latest brake discs being used on some racing motorcycles are made of carbon fiber. Carbon fiber is extremely light and also provides a very good braking surface. It's also very, very expensive! Therefore, only on a rare occasion will a motorcycle technician be required to work with this type of brake disc. Because of the limited materials that can

be used to make lightweight discs, thermal distortion becomes a problem if the disc is made too thin. Discs are commonly drilled with holes or grooves to help remove dust or water from the disc surface while the brakes are being applied.

Inspection and Maintenance. Inspect the brake discs for wear and warping. A warped disc causes the brake pads to drag and wear quickly. To check for a warped disc,

1. Jack up the wheel.
2. Place a dial indicator against the disc (Figure 12).
3. Rotate the wheel. Any run-out (wobble) will be shown on the dial indicator.
4. Measure the disc thickness (for wear) using a micrometer (Figure 13).
5. Replace the disc if it's worn or warped beyond serviceable limits, as indicated in the appropriate service manual.

FIGURE 12—A dial indicator is placed against the brake disc to determine if the disc is bent.

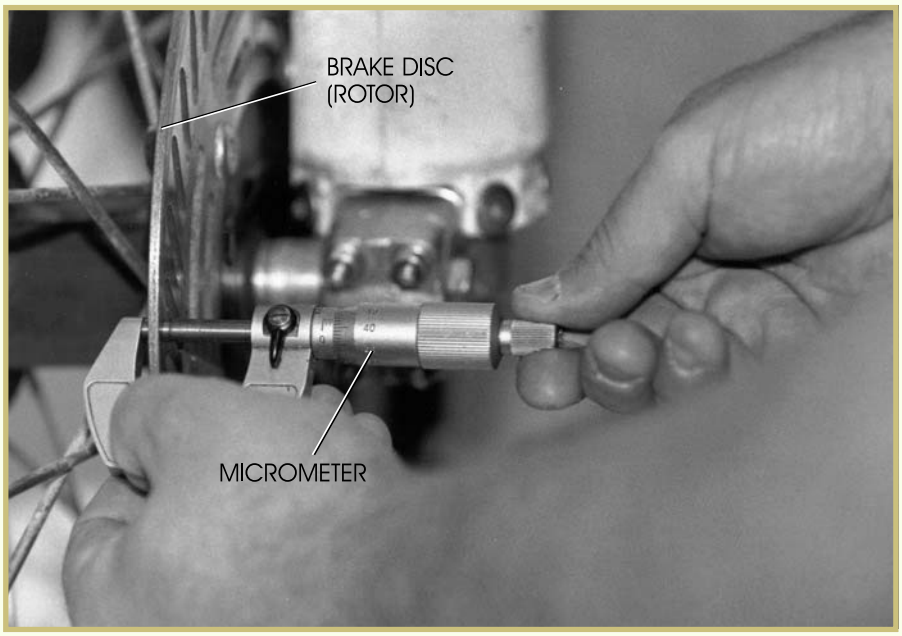

FIGURE 13—The technician is measuring brake-disc thickness with a micrometer. The brake disc wears from the high amount of friction created by the brake pads.

Hydraulic Disc Brake Precautions

When working with hydraulic disc brakes, observe the following precautions.

- Never reuse brake fluid.
- Don't use fluid from a container that has been left open for a long period of time. The fluid is hygroscopic (it absorbs moisture from the air).
- Don't mix two types of fluid (glycol-based with silicon-based) for use in brake systems.
- Don't leave the reservoir cap off for any length of time, because the fluid may absorb moisture from the air and the system may collect other contamination such as dust and dirt.
- Don't change the fluid in the rain or when a strong wind is blowing.
- DOT 3 and DOT 4 brake fluid will damage painted surfaces. Wipe up any spilled fluid immediately.
- Don't use gasoline, motor oil, or any other mineral oils near disc-brake parts; these oils cause deterioration of rubber brake parts. If oil spills on any brake parts, it's very difficult to wash off and will eventually react and break down the rubber.
- If any of the brake-line fittings or the bleeder valve are loosened at any time or for any reason, the air must be bled from the brake.

Antilock Braking Systems (ABS)

Antilock braking systems prevent the wheels from locking up under excessively hard braking or when attempting to stop on slippery surfaces such as wet roads. This system controls braking torque during heavy over-operation of the brakes (such as a panic stop to avoid an accident) and helps ensure optimum tire-to-road-surface traction during hard braking.

The antilock braking system is activated only when the motorcycle rider applies the front or rear brakes hard enough to lock up the wheel assembly. The ABS operates through a computer that measures wheel speed by using various sensors placed on the brake discs and brake calipers and then controlling brake-fluid pressure accordingly. This varies the braking torque to allow the front and rear wheel assemblies a limited amount of controlled slipping.

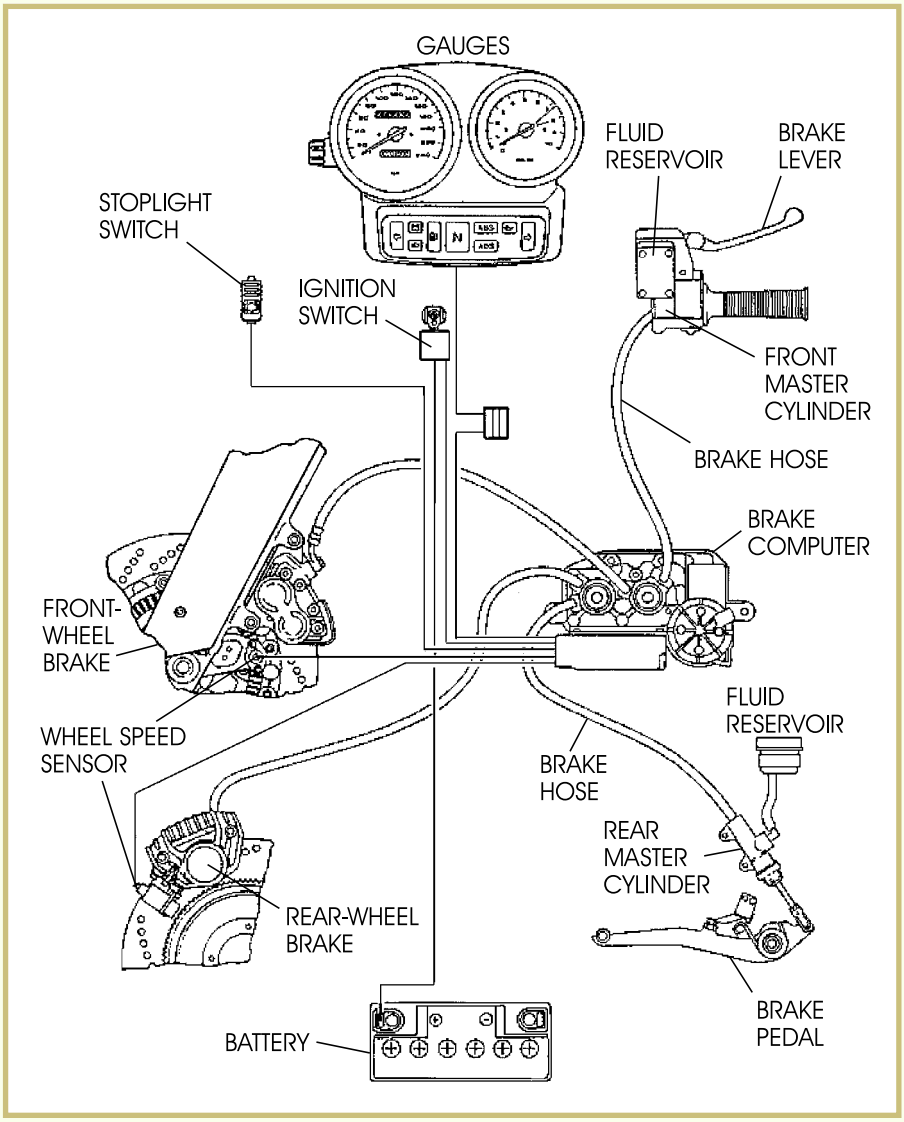

FIGURE 14—This illustration shows the component parts of the BMW antilock brake system. (Courtesy of BMW of North America, Inc.)

Figure 14 shows the components of a BMW antilock brake system. The system uses a computer that monitors and controls the brake-line pressure under certain conditions, from the lever to the brake discs. Wheel-speed sensors placed on the wheels and also on the brake calipers tell the computer when the wheel is locked up. When the computer senses a lock up, it eases the brake-line pressure to allow the wheel to keep rotating while bringing the motorcycle to a safe stop.

Road Test 1

At the end of each section of *Brakes, Wheel Assemblies, and Tires*, you'll be asked to check your understanding of what you've just read by completing a "Road Test." Writing the answers to these questions will help you review what you've learned so far. Please complete *Road Test 1* now.

1. In a mechanical drum-brake system, could worn brake shoes cause the brakes to drag? Explain your answer.

   _____

2. In an expanding-shoe mechanical braking system, what component pushes against the shoes to press them outward?

   _____

3. Are disc brakes more popular for front wheels, rear wheels, or equally popular for both?

   _____

4. On a disc brake, what causes the braking action?

   _____

5. What symptom indicates that air has entered a disc-brake system?

   _____

6. When is the antilock brake system activated?

   _____

Check your answers with those on page 51.

MOTORCYCLE WHEELS AND TIRES

Motorcycle wheels can be separated into two basic categories—spoke wheels and non-spoke wheels.

When we refer to *spoke wheels* in this study unit, we are talking only about those wheels having *wire* spokes. When we refer to *non-spoke wheels,* we are talking about wheels that don't have wire spokes; however, as you'll soon learn, some wheels may have several rigid metal supports between the hub and rim of the wheel. These supports are also sometimes referred to as spokes, although we won't consider them spoke wheels in this study unit.

Non-spoke wheels can be further divided into the following wheel designs:

- Assembled wheels
- Split-rim wheels
- Magnesium or aluminum cast wheels

All wheels are designed to support the weight of the motorcycle and rider, and to assist in providing the driving, braking, and steering forces. These wheel designs are light, but strong to ensure a safe and comfortable ride.

Spoke Wheels

Spoke wheels are made with a steel or aluminum outer rim combined with strong wire spokes (Figure 15). Most spoke-wheel assemblies are laced with a cross pattern. In a cross pattern, one spoke crosses other spokes that are going in the opposite direction from the same side of the hub and rim. Different cross patterns are determined by the number of times that one spoke crosses other spokes. The higher the cross-pattern number, the more vertical and radial strength the wheel assembly will have. This will be covered in more detail later in this study unit.

FIGURE 15—A Typical Spoke-Wheel Assembly
(Copyright by American Honda Motor Co., Inc. and reprinted with permission)

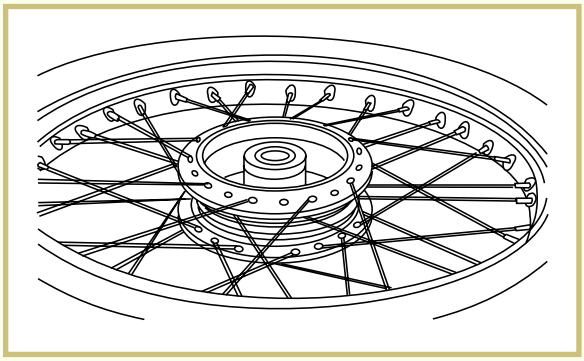

Non-Spoke Wheels

Assembled Wheels

Assembled wheels are made from aluminum (Figure 16). The supports (spokes) can be made of steel or aluminum and are riveted to the outer rim and then bolted to the hub. This allows the manufacturer to use a variety of different-sized outer rims while using one common hub. The assembled wheel requires very little maintenance and shouldn't be disassembled. Keep the wheel clean and occasionally check for cracks as well as for wheel trueness.

FIGURE 16—An assembled wheel is shown in this illustration. The outside of the rim has rivets, while the inside uses bolts for assembly purposes.

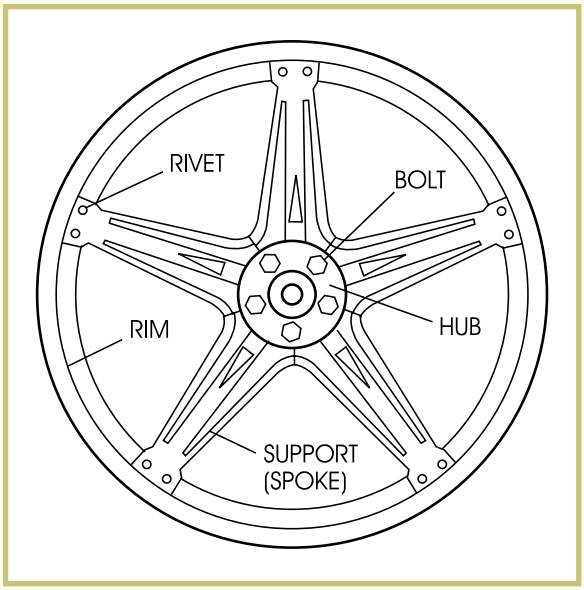

Split-Rim Wheels

Split-rim wheels have a two-piece rim and are mainly used on three-wheel and four-wheel ATVs and on some off-road motorcycles. A split rim is illustrated in Figure 17.

Cast Wheels

Cast wheels were first used on racing motorcycles to reduce weight and to maintain greater precision. The weight reduction was provided partly because the cast wheel had a smaller hub than was required by the spoke-type wheel. The smaller hub also simplified the mounting of disc brakes to the wheel. Eventually, aluminum cast wheels replaced the more expensive magnesium cast wheels on almost every production street motorcycle that didn't use a spoke-type wheel. Today, cast wheels are designed to be used with either a tube-type or a tubeless-type tire and will have a marking on the rim stating if it's designed for tubeless tire use only.

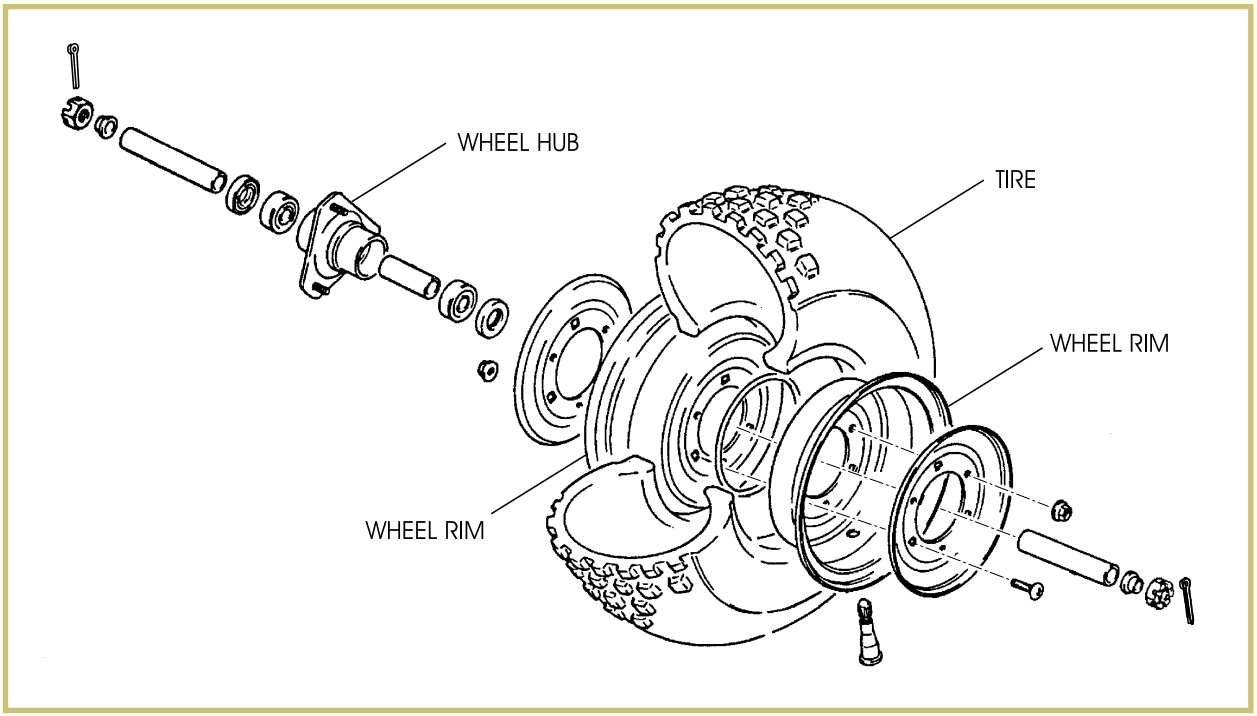

FIGURE 17—A typical ATV split rim is shown here. (Courtesy of American Suzuki Motor Corporation)

Wheel Removal

The following information describes how to raise the motorcycle and how to remove the front and rear wheels. Information is included for you to build a simple portable stand that you'll often use as a motorcycle technician.

Raising the Motorcycle from the Ground

When you need to fix a flat or change a tire, the first thing you must do is raise the wheel high enough from the ground so the fender and chassis won't interfere with dropping the wheel from its mounting position. If you have a hydraulic lift, as many motorcycle shops do, just set the frame across the lift so the motorcycle is equally balanced. Secure the motorcycle to the lift using tie-downs. If you don't have such a lift, you can use the center stand that's available on most motorcycles. If the motorcycle doesn't have a center stand, you'll need some type of block to lift the motorcycle. One option is to build a portable stand as described in the following text.

Building a Portable Stand

You can easily build a portable motorcycle stand, as shown in Figure 18, to lift the motorcycle for removing and installing wheels. To build the stand, obtain the following pipe and fittings. All pipe is 1-inch black, steel gas pipe. If 1-inch pipe isn't available, ¾-inch pipe is satisfactory. Threading is standard pipe threading.

- 2 pieces, 12 to 14 inches long, threaded on both ends
- 1 piece, 18 inches long, threaded on both ends
- 1 piece, 36 inches long, threaded on one end
- 1 90-degree elbow
- 1 90-degree three-way tee
- 2 male caps

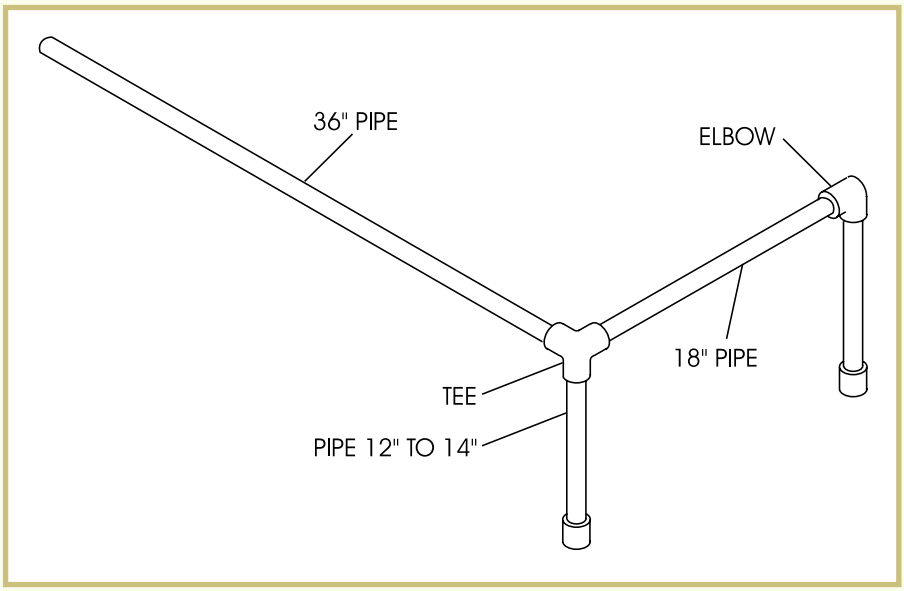

FIGURE 18—This portable stand can be easily built using the materials and instructions contained in the text.

If you can't get any black, steel gas pipe, you can use water pipe. However, the pipe should be welded or brazed at the joints for strength, and to prevent the pipe from turning in the fittings. (Water pipe is difficult to weld or braze because it's galvanized.)

Follow these steps to assemble your stand.

1. Screw the caps onto one end of each of the two 12 to 14-inch pipes.
2. Screw the 90-degree elbow on the other end of one of the 12 to 14-inch pipes.
3. Screw the 18-inch pipe into the other side of the elbow.
4. Screw the 90-degree three-way tee onto the other side of the 18-inch pipe.

5. Screw the other 12 to 14-inch pipe into the other side of the 90-degree tee. You now have a U-shaped device.
6. Screw the 36-inch pipe into the other side of the 90-degree tee. You now have a U-shaped device with a handle.

To use your portable stand, place the U under the motorcycle frame and push the handle down to the floor. This lifts one wheel and supplies three points of contact for the pipe to rest on the floor. The wheel you're not working on remains on the floor, giving a fourth point of contact and providing a firm base.

Removing the Front Wheel

Motorcycle manufacturers use many different methods of attaching the front axle to the fork assembly. The most popular methods of attachment are as follows:

- On some motorcycles, the front wheel axle is held by an axle nut. With the front wheel off the ground, simply loosen the axle nut as illustrated in Figure 19.

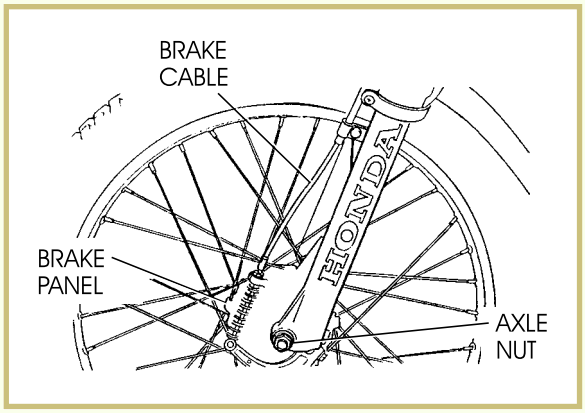

FIGURE 19—In this illustration, the axle is held by an axle nut. Removing the nut allows the axle to slide out. (Copyright by American Honda Motor Co., Inc. and reprinted with permission)

- Some motorcycles have axle-shaft holder nuts on both sides of the axle, as illustrated in Figure 20. Loosen the holder nuts to remove the axle.
- Another style of front-wheel attachment is an axle holder that allows you to remove the entire wheel and axle as one assembly. You can loosen the nuts and remove the axle from the wheel or you can remove both holders, one on each side, as illustrated in Figure 21, to remove the wheel and axle as one assembly.
- The final example, which is a very popular method of holding the front wheel in place, is shown in Figure 22. In this design, as with the others, the axle is held in place with an axle holder that's pinched together with axle-holder nuts.

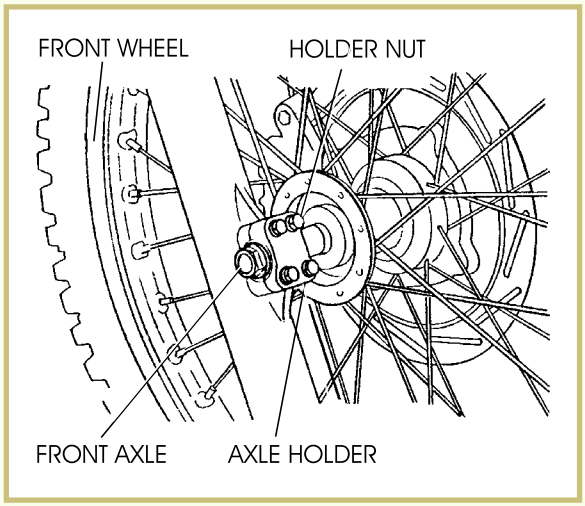

FIGURE 20—This illustration shows the axle being held in place by a pinch-type axle holder. The holder nuts must be loose before you can remove the axle. (Copyright by American Honda Motor Co., Inc. and reprinted with permission)

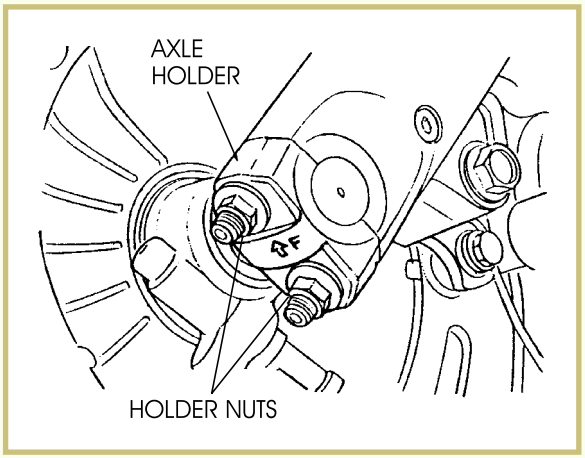

FIGURE 21—This style of axle holder allows the removal of the entire wheel and axle as one assembly. (Copyright by American Honda Motor Co., Inc. and reprinted with permission)

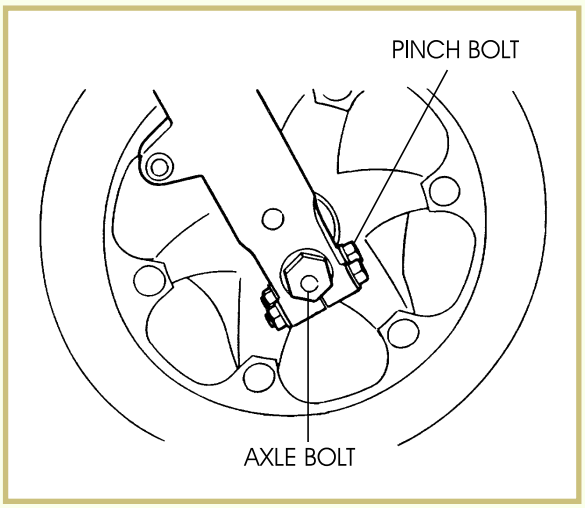

FIGURE 22—This illustration shows a simple axle pinch-bolt arrangement, which is a very popular way to hold the axle bolt in place. (Copyright by American Honda Motor Co., Inc. and reprinted with permission)

After you remove the axle holders or the axle itself from the wheel, you can remove the front wheel for further servicing. If you support the weight of the wheel while removing the axle, you'll make the job a little easier.

Removing the Rear Wheel

The most common method used to attach the rear wheel to the swing arm or frame is an axle inserted through the rear-wheel brake assembly and sprocket. The assembly is secured with a nut and cotter pin. To remove a wheel of this type:

1. Loosen or remove the axle nut.
2. Remove the drive chain from the sprocket (Figure 23).
3. Remove any brake parts that may prevent the removal of the wheel.
4. Pull back and free the wheel from its mounts.

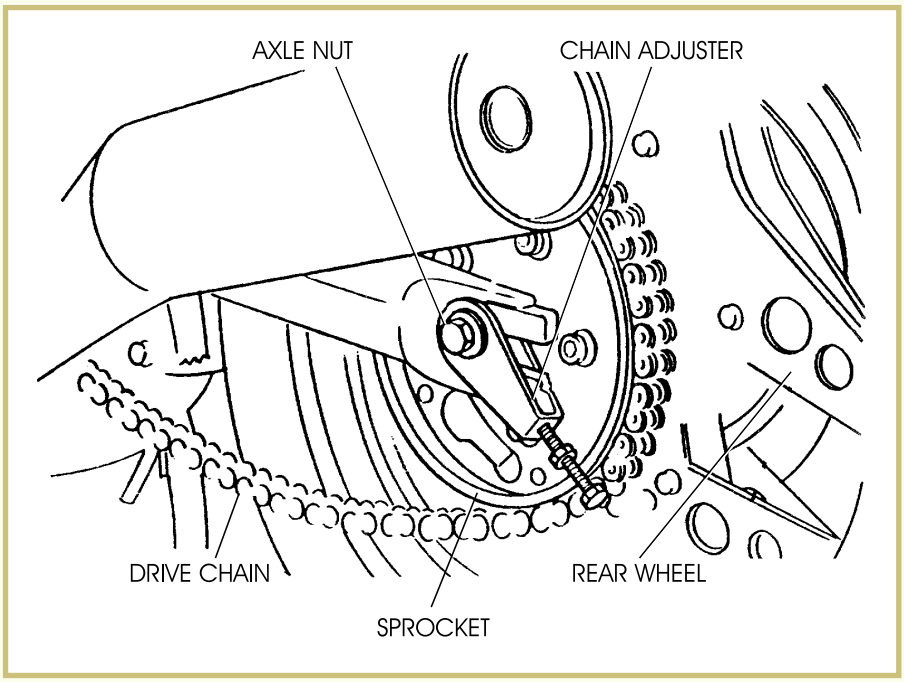

FIGURE 23—Removal of the rear wheel of a typical motorcycle is shown here. (Copyright by American Honda Motor Co., Inc. and reprinted with permission)

Not all wheels mounted by this method have just one nut on the sprocket side to hold the axle. A few manufacturers once used a split-axle arrangement. In this arrangement, a nut screws into a short stub axle and secures the sprocket. Again, the stub axle is short and fits in the center of the sprocket. The main axle then screws into threads inside the stub axle. This allows you to remove the wheel without removing the chain and sprocket. To determine if this is the wheel-mounting system being used, refer to the appropriate service manual.

Generally, most axles have a round end on the brake side with a hole drilled through it. To remove the axle without damaging any axle-bolt threads, insert a thin pry bar through the axle hole. Pull on the pry bar to slide the axle out and allow the rear wheel to be removed.

Shaft-driven rear wheels are the easiest wheels to remove. If the motorcycle has a shaft-drive system and drum brakes, as illustrated in Figure 24, remove the wheel using the following procedure:

1. Disconnect the brake torque rod and brake rod.
2. Loosen the axle nut and axle pinch bolt.
3. Remove the axle and wheel assembly.
4. If the motorcycle shaft-drive system has hydraulic disc brakes, move the caliper bolts and move the caliper assembly away from the disc to avoid interference.
5. Remove any collars.
6. Pull the rear wheel from the final drive gear.
7. Remove the rear-wheel assembly.

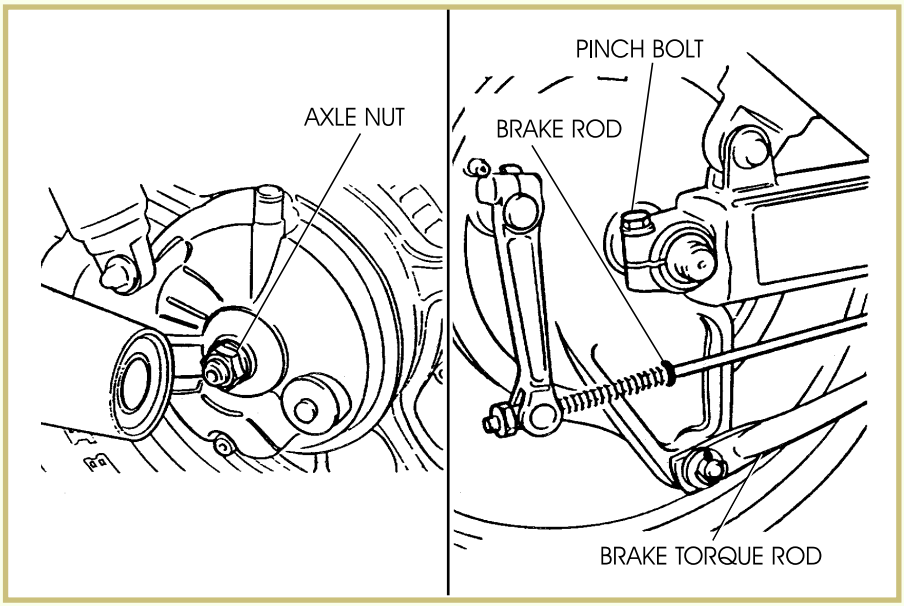

FIGURE 24—The shaft-drive wheel is the easiest type of wheel to remove from a motorcycle. (Copyright by American Honda Motor Co., Inc. and reprinted with permission)

Axles, Wheel Bearings, and Wheel-Bearing Seals

Whenever the wheel assembly's axle is removed, you should always check the axle's run-out using V-blocks and a dial indicator, as illustrated in Figure 25. Check the model-specific service manual for the actual service-limit run-out.

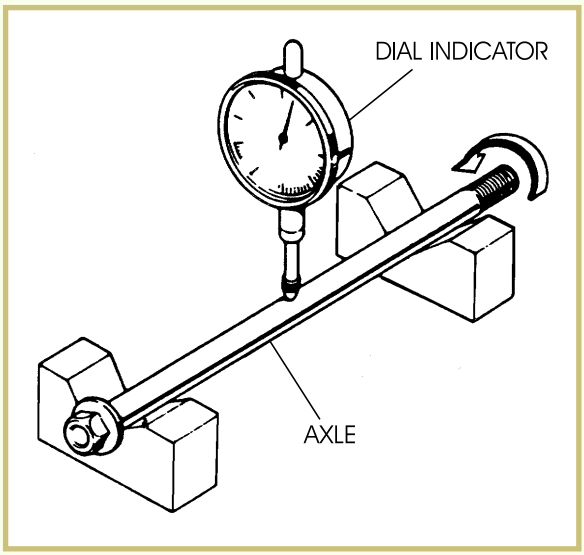

FIGURE 25—This illustration shows how to measure axle run-out. (Copyright by American Honda Motor Co., Inc. and reprinted with permission)

Wheel bearings should also be checked when the wheel has been removed or when the manufacturer has stated a recommended replacement time. Before checking a wheel bearing, you must first remove the wheel-bearing dust seal. It's a good practice to always replace the seal when it's been removed. Remove the bearing from the hub using a drift and hammer, as illustrated in Figure 26. Replace the bearings if they show any sign of roughness or discoloration.

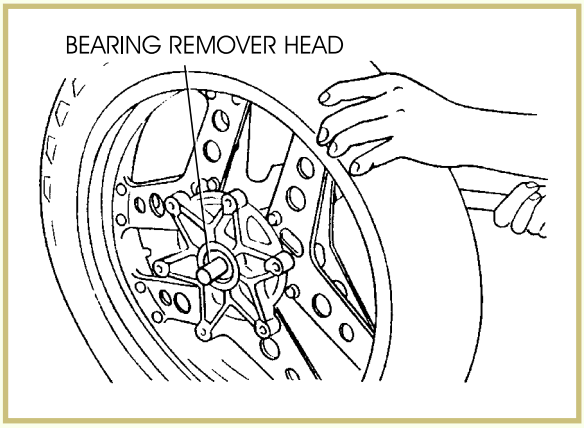

FIGURE 26—The technician is removing a wheel bearing in this illustration. (Copyright by American Honda Motor Co., Inc. and reprinted with permission)

Two types of wheel bearings are commonly used. One is the cage bearing, and the other is the tapered bearing. Always replace wheel bearings in sets. Install one bearing using the special bearing driver, as illustrated in Figure 27. Check the distance collar for it's proper installation direction, as illustrated in Figure 28.

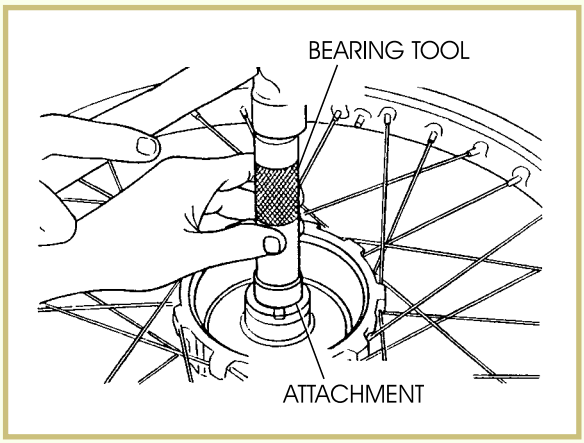

FIGURE 27—Installing Wheel Bearings Using a Special Bearing Driving Tool (Copyright by American Honda Motor Co., Inc. and reprinted with permission)

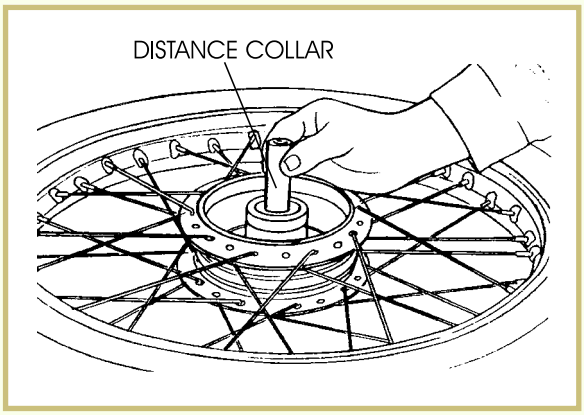

FIGURE 28—Always be sure to install the wheel distance collar. (Copyright by American Honda Motor Co., Inc. and reprinted with permission)

Install the other bearing and seal. Tapered roller wheel bearings require a certain amount of end play. Consult the appropriate service manual for proper torque specifications. Remember, when installing wheel bearings

- Always replace right and left bearings in pairs.
- Never reuse old bearings.
- If a bearing is sealed on one side, always install the bearing with its sealing face towards the outside of the hub.
- If both sides of a bearing are sealed, install the bearing with its stamped size mark towards the outside of the hub. Heat eventually causes chemical and physical deterioration, which will weaken the bearing.

Basic Tire Information

There are two basic types of tires—*tube type* and *tubeless*. However, some tires will have stamped on the side wall, "Tubeless — on tube-type rim-fit tube." This tire can be used without a tube when fitted on an appropriate tubeless wheel, but may also be used with a tube.

Tube-Type Tires

Tube-type tires are designed to use an inner tube to hold air in the tire. This air-filled tube is inside the tire's casing, as illustrated in Figure 29. If the tire gets penetrated with a nail or other sharp object, air will leak out instantly and the tire will have to be removed so the tube can be replaced. You should never repair a tube; always replace it with a new one. When fitting a new tube to a tire, be sure the tube-size and tire-size markings are the same.

FIGURE 29—This illustration shows a cutaway view of a tube-type tire. (Copyright by American Honda Motor Co., Inc. and reprinted with permission)

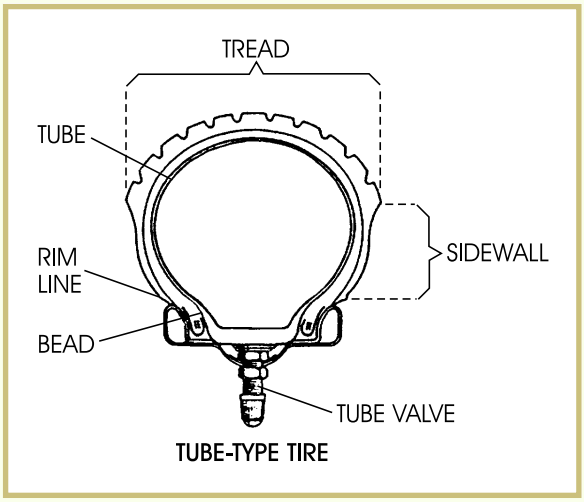

Tubeless Tires

Tubeless tires share most of the design features of a tube-type tire, except the tubeless tire includes an *inner liner* which prevents air from filtering through the tire (Figure 30). This inner liner acts in place of the inner tube used in a tube-type tire. A snap-in rim valve allows for the input of air into the tire and rim.

FIGURE 30—This illustration shows a cutaway view of a tubeless tire. (Copyright by American Honda Motor Co., Inc. and reprinted with permission)

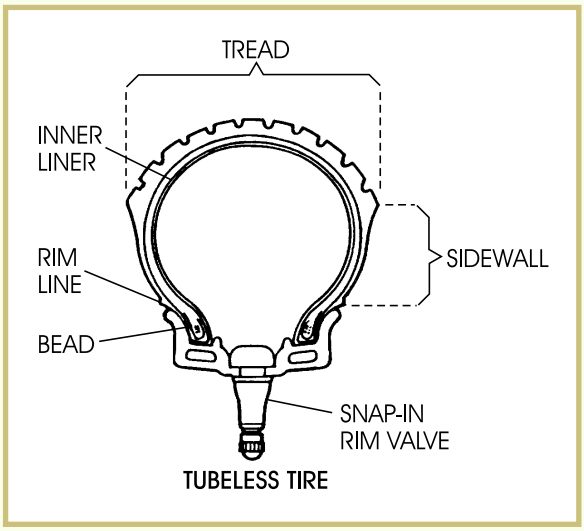

Using a tube in a tire marked tubeless will create excessive friction and heat and can cause problems; therefore, unless under emergency conditions, don't install a tube in a tubeless-type tire. Tubeless tires can be repaired in many cases after a puncture has been identified, by using a plug-patch repair unit. These repairs aren't endorsed by any motorcycle or tire manufacturer but are known to be an acceptable solution to replacing a tire that's in otherwise excellent condition.

Tire Size

Whenever you replace a tire, you must use one that's the correct size. This correct tire size is provided by the manufacturer. Changing to a different-size tire can cause problems. Using an oversized tire can cause the tire to make contact with the fender or forks. Also remember that the motorcycle's geometry is a critical aspect of the design. Any changes in tire size can dangerously affect handling and the stability of the motorcycle.

Tire code numbers and letters are printed on the side wall of the tire. These code numbers and letters provide an inch or metric indication of the tire size and rating. Figure 31 shows how to interpret the tire code. When replacing a tire, refer to the technical data published by the manufacturer. Consider the tire size, motorcycle use, tire design, load-and-speed ratio, and tread pattern before choosing a tire.

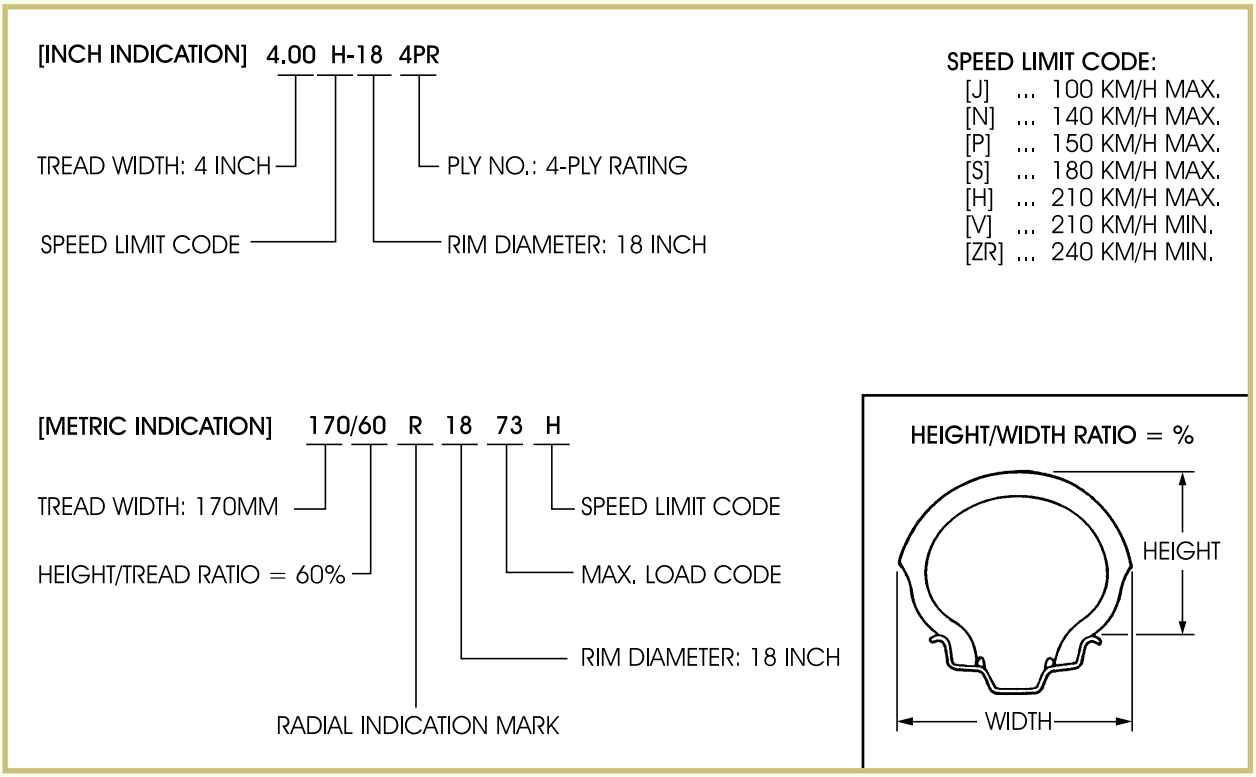

FIGURE 31—Tire codes tell you everything you need to know about a tire. (Copyright by American Honda Motor Co., Inc. and reprinted with permission)

Tire Removal

Removing tires from rims is the part of tire repair that causes the most trouble for the beginner. One reason for this is that motorcycles use a drop center rim, which means that the center of the wheel is lower than the edges. The rim is built this way to provide a seat for the tire bead. The bead of the tire is similar to that on an automobile tire; however, the bead seats on automobile rims are wider and there's more room in the rim valley. Consequently, auto tires are easier to remove than motorcycle tires.

Motorcycle tire beads are generally nearly as wide as the valley of the rim. Therefore, it's very difficult to free both beads from their seats at the same time. Both beads must be in the valley before the tire can be removed from the rim. This is a tough job. Figure 32 shows an illustration of the tire bead in the rim center.

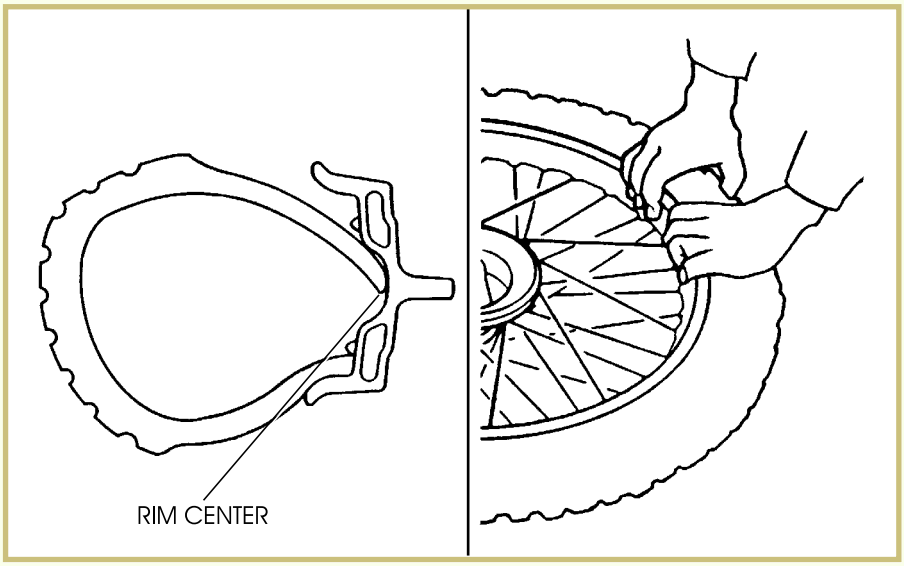

FIGURE 32—The tire can be removed more easily if the tire bead is in the rim center as shown here.
(Copyright by American Honda Motor Co., Inc. and reprinted with permission)

The following is a procedure you can use to remove a tube-type tire from a wheel. A tubeless tire can also be removed using the same general steps.

1. To prevent the chrome on the wheel spokes from being damaged, cut an old bicycle tire to fit over the top edge of an open bucket or drum.
2. Place the wheel with the sprocket side down, on the bucket or drum so the spokes rest on the bicycle tire. (With the sprocket facing downward, there's less chance of injury if the tire tool slips when you're prying the tire from the rim.)
3. Remove the valve stem cap, lock nut, and core.
4. Mark the tire with chalk to indicate the location of the valve.

5. Press the bead away from the rim on both sides of the wheel by squeezing the beads together by hand until the beads drop in the valley (Figure 33). This frees the beads from the bead seats.

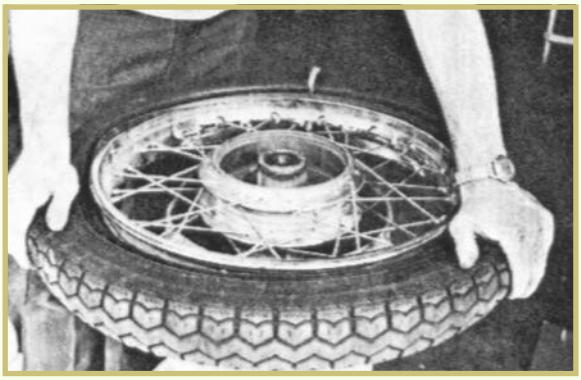

FIGURE 33—The technician is pushing the tire beads from the bead seats into the rim center.

6. Push the valve stem through the rim into the valley.
7. Hold the top side of the tire at the position directly across from the valve stem so it doesn't come out of the rim valley.
8. Use a tire-iron tool to hook the bead near the valve stem and pry it over the rim (Figure 34).

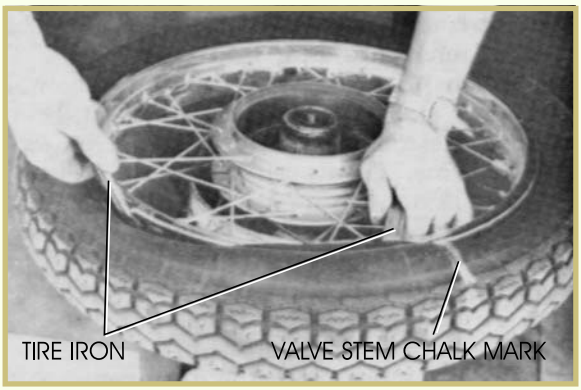

FIGURE 34—Tire irons are used to remove the tire from the rim.

9. While holding the tire tool in position, place another tool about 4 to 6 inches away from the first one. Pry another part of the tire over the rim. This should free one of the tire tools.
10. Use the free tool and repeat the 4- to 6-inch progression around the tire, prying it off as you go.
11. When the entire side of the tire is free of the rim, pull the inner tube from the tire (Figure 35). If the tire needs to be completely removed from the rim, remove the other side of the tire in the same manner using the tire-iron tools.

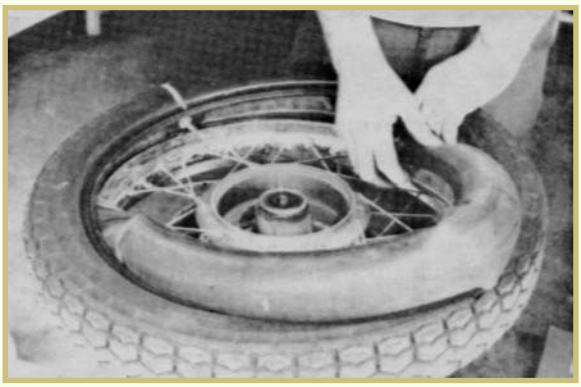

FIGURE 35—The technician is removing the tube from the tire and rim.

Tire and Wheel Inspection

In the valley of the rim, you should find a *rim strip*. A rim strip is a rubber strip used to protect the inner tube from damage caused by the spoke ends. Carefully inspect each spoke end. If any spoke ends extend past the nipple, file the end of the spoke to remove the excess. Protruding spoke ends can puncture the inner tube.

When the tire is removed, you should inspect the inside of the tire for cuts, broken cords, nails, or other problems. An easy way to find nails that have punctured the casing is to use a wipe rag to go around the inside of the casing. If a nail has remained in the tire, the rag will catch on it.

If you find a nail in the tire, remove it and replace the tube with a new tube. Motorcycle inner tubes should be replaced, for safety reasons, rather than being repaired. The expense is minimal.

While the tire is removed, it's a good idea to inspect the wheel spokes for tightness and to be sure that none are broken. If the wheel needs to be repaired, now is the time to do it. We'll discuss the repair of spoke wheel, later in this study unit.

Tire Installation

The following is a procedure you can use to install a tube-type tire onto a wheel. A tubeless tire can also be installed using the same general steps.

1. Place the wheel, with the sprocket side facing down, on the bucket or drum.
2. Dust the inside of the tire with talcum or baby powder. Powder allows the inner tube to slip and align when air pressure builds in the tube.

3. Lubricate the tire beads. Use only special rubber lubricants, which are available at automotive-parts stores. Don't use water or soap, as these could cause corrosion inside the wheel assembly.
4. Place the tire on the wheel rim and start the lower bead onto the rim by hand.
5. Use the tire-iron tools to pry 4- to 6-inch sections of the bead into place until the lower bead is installed on the rim.
6. Install the valve core into the valve of the inner tube.
7. Pump just enough air (1–2 pounds) into the inner tube to make it round. Don't inflate the tube so that it stretches. There should be just enough air to remove the wrinkles.
8. Place the valve stem in the hole of the rim and secure it with the lock nut.
9. Carefully push the remainder of the tube into the tire. Be sure that none of the tube is caught between the tire bead and rim edge.
10. Install the remaining bead onto the rim. Start directly across from the valve stem and press the bead into the rim valley. Work the tire onto the rim equally on each side of the starting point as far as possible by hand. You should be able to get more than half the bead installed in this manner. Be sure to keep the starting point well down in the valley of the rim.
11. After you've progressed as far as possible by hand, use the tire tools to pry small sections of the tire onto the rim (Figure 36). Use extreme care that you don't pinch the tube between the tire tool and the rim, or you may cut a hole in the tube.

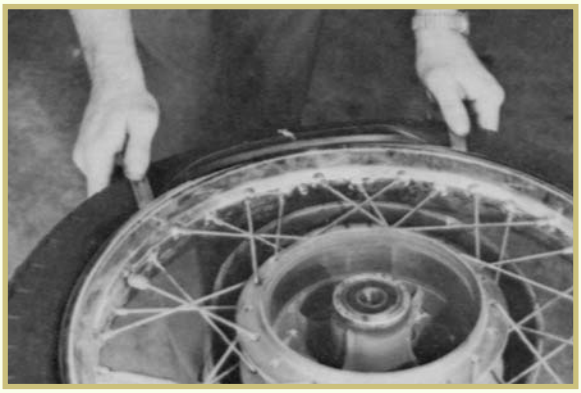

FIGURE 36—Use the tire-iron tools to finish installing the tire onto the rim.

12. The last section of the tire to slide over the rim should be in the area of the valve stem. Just before this section slides into place, push the valve stem into the inside of the tire as far as it will go. The lock nut will contact the rim, preventing the valve stem from going completely through the rim.

13. Remove the valve core and fill the inner tube with air pressure to seat the tube seat in its proper position. Let the air out and reinsert the valve core. Refill the tube to the correct air pressure.

Wheel Balancing

Wheel balancing is important because it affects the wear of the tire and provides handling and a smooth ride. To balance a wheel, you must determine where the wheel-and-tire assembly is the heaviest and then place a small weight opposite the heavy portion of the wheel. The weights are placed either on the spokes or on the rim of the wheel.

There are several ways to balance a motorcycle tire. The two most common ways are *static balancing* and *spin balancing*. Spin balancing requires the use of a special machine. If a wheel-balancing machine isn't available, the wheel can be balanced on the motorcycle. To balance a wheel on the motorcycle, remove the front-wheel assembly and remove the wheel's backing-plate assembly or hydraulic-caliper assembly. Reinstall the wheel on the motorcycle without the backing plate or hydraulic caliper. Spin the wheel slowly and wait for it to stop. The wheel will stop with the heaviest point facing towards the ground. Mark the top of the wheel with a piece of chalk to indicate the lightest part of the tire and wheel assembly. This is illustrated in Figure 37, which shows a static wheel-balancing stand.

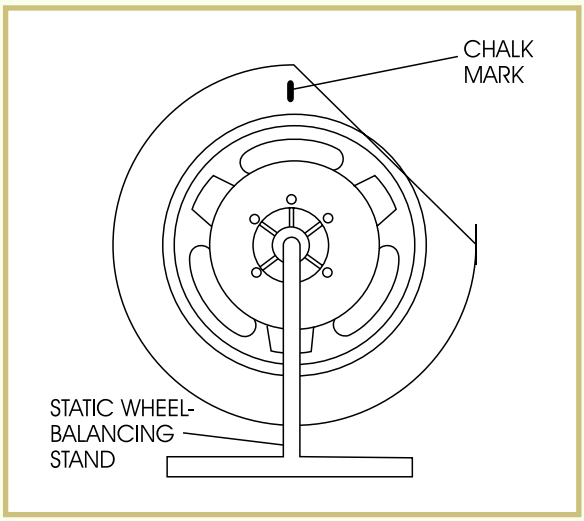

FIGURE 37—A static wheel-balancing stand can be used to balance a wheel assembly. (Courtesy Kawasaki Motor Corp., U.S.A.)

To balance the wheel, add a wheel weight to the light side of the wheel as indicated by the chalk mark. Spin the wheel again several times, each time noting where the wheel stops. When the wheel doesn't come to rest in the same spot each time it's rotated, the wheel is balanced. This job takes patience but once you've mastered it, the job will only take a few minutes. It's extremely important to remember to balance wheels whenever the tire has been separated from the rim.

Wheel Installation

To reinstall the wheel on the motorcycle, replace the wheel into its mounts and secure the axle and brake plate or hydraulic caliper. Be sure all lock washers, cotter pins, and other safety devices are in place, and torque the fasteners to the manufacturer's recommendations. Be extra careful of the locking devices on the brake assembly. If the backing plate anchor becomes free, it will cause the wheel to lock up when the brakes are applied. Make sure all fasteners are secured properly. Finally, if reinstalling the rear wheel, be sure the chain tension and wheel alignment are correct.

After you've replaced and repaired a few tires, your speed will increase tremendously. Charges for this service will vary but are usually very high. Consequently, replacing tires can be quite profitable for both the technician as well as the service shop.

Road Test 2

1. *True or False?* Two-piece rims are used on larger off-road motorcycles.

2. Name the two basic wheel categories.

   _____

3. Which wheel design lets the manufacturer use the same hub, while using different outer rim widths and sizes?

   _____

4. What two tools are used to remove a wheel bearing?

   _____

5. *True or False?* The tube-type tire doesn't have an inner liner.

6. *True or False?* It's recommended to use baby powder when reinstalling a tube in a tire to allow the tube to align properly.

7. _____ wheels were first used on racing machines to reduce weight and to maintain greater precision.

8. *True or False?* A tube-type tire should be repaired with a plug patch if it's punctured with a nail.

Check your answers with those on page 51.

REPAIRING MOTORCYCLE SPOKE WHEELS

The replacement of a motorcycle wire-spoke wheel rim can be a difficult job. The job becomes much more complex because the spokes are connected to the hub flange and run in different directions. This arrangement enables the spokes to more effectively

- Support the weight of the motorcycle
- Accept the force of acceleration
- Accept the force of braking

Figure 38 shows how the different spokes support the stresses between the wheel hub and rim. The vertical spokes shown in Figure 38A mainly support the weight of the motorcycle and the shock received when the motorcycle hits a bump. The spokes shown in Figure 38B are angled to the rear of the motorcycle and take the majority of stress from acceleration. The spokes shown in Figure 38C are angled to the front and take the majority of stress during braking.

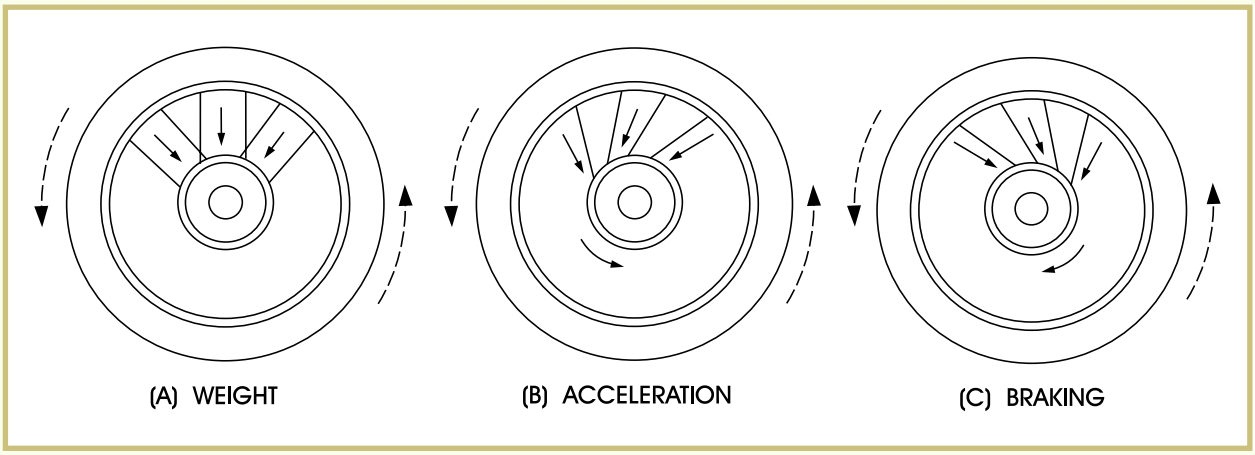

FIGURE 38—This illustration shows how the spokes of a wheel support the stresses of (A) motorcycle weight, (B) acceleration, and (C) braking. The broken arrows indicate the direction of wheel rotation. The solid arrows indicate stress.

Repairing Spoke Wheels

Spokes mustn't be allowed to become loose. Loose spokes allow the rim to warp and increase the possibility of breaking the spokes. Loose spokes can also cause excessive wear to the hub and spoke nipple.

Broken spokes should be replaced immediately. Broken spokes increase the load on other spokes, which eventually causes the other spokes to break.

Spokes must be kept tight. Because each spoke will stretch a certain amount, the spokes should be tightened regularly—and evenly. Spokes that are too tight or too loose will cause the wheel to wobble.

Overtightening or undertightening can cause breakage of the spoke, nipple, or the hub.

Installing a new set of spokes into a hub and rim can be very difficult for the beginner because of the pattern that must be followed when inserting the spokes. However, if done correctly, installing spokes is quite easy and you'll never bend a spoke when installing it.

There are two things you must ensure before you begin installing spokes into a rim. First, be certain you have a rim with the correct number of holes. Usually motorcycles use a 36- or 40-spoke wheel. The rim must have the same number of holes as the hub.

Second, be sure the angles of the rim holes for the nipples are correct. Each nipple will just fit through the rim. If the angle is too much or not enough, it will cause the spoke to bend when tightened.

Lacing Spoke Wheels

Installing spokes in a wheel is called *lacing*. Remember the following tips when lacing spoke wheels.

- Be sure the spoke length is correct. In some cases, different-length spokes are used on the same wheel.
- Be sure the angle of the nipple hole in the rim is correct.
- Be sure the head angle of the spoke is correct.
- Don't tighten any spoke until all spokes are installed.

A typical lacing pattern is shown in Figure 39. Notice that every other spoke is installed with the spoke head on the inside of the wheel flange. These spokes are called *outer spokes* because they're positioned on the outside of the flange; only the head of each spoke is on the inside.

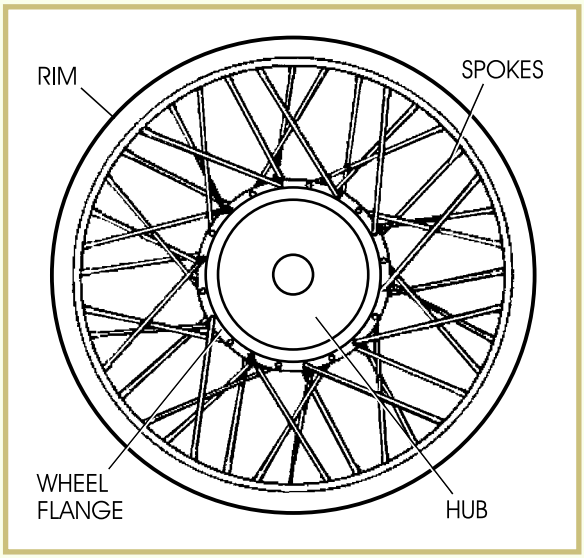

FIGURE 39—This illustration shows a typical wheel lacing pattern.

You should also notice that the other spokes have their heads on the outside of the hub. These are called *inner spokes* because the entire spoke except the head is inside the flange. Outer spokes are laced over the inside spokes. Figure 40 illustrates an inner and outer spoke.

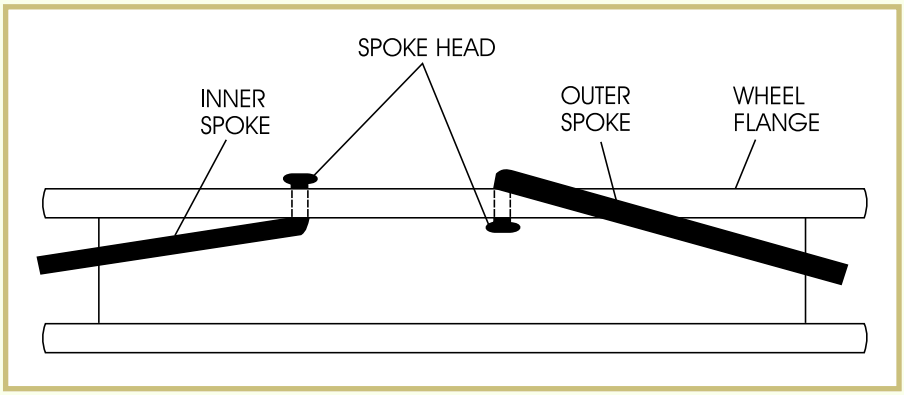

FIGURE 40—An inner spoke is shown on the left and an outer spoke is shown on the right in this illustration.

Installing the Spokes

Begin by placing the hub on a workbench with the left side facing up. (The left and right sides of the hub are determined by whether the side is to the left or right of the rider.)

Install the inner spokes (heads on outside) first. Start with the inner spokes on the left side of the hub. Install all of these spokes into the hub. With the spokes running in the opposite direction of wheel rotation, lay the wheel rim over the spokes.

Place the first spoke through the rim at the nipple hole nearest to the valve stem hole. The first spoke must go through the left side of the rim. Moving around the wheel in the direction of rotation, connect each spoke into each fourth empty hole on both 36-hole and 40-hole wheels. Connect all the nipples on the left side of the rim. Turn the wheel over and repeat the procedure for the right side. When this is complete, you'll have positioned all the inner spokes.

Next, position the outer spokes on one side; then, turn the rim over and position the outer spokes on the other side. Be sure that all inner spokes on both sides of the wheel are in place before you insert any of the outer spokes.

When all spokes are installed in a 36-hole wheel, each outer spoke will cross three spokes. In a 40-hole wheel, each of the outer spokes will cross four other spokes, as seen in Figure 41.

After you've completed lacing the wheel, you should have one set of spokes running in the direction of wheel rotation on each side of the wheel.

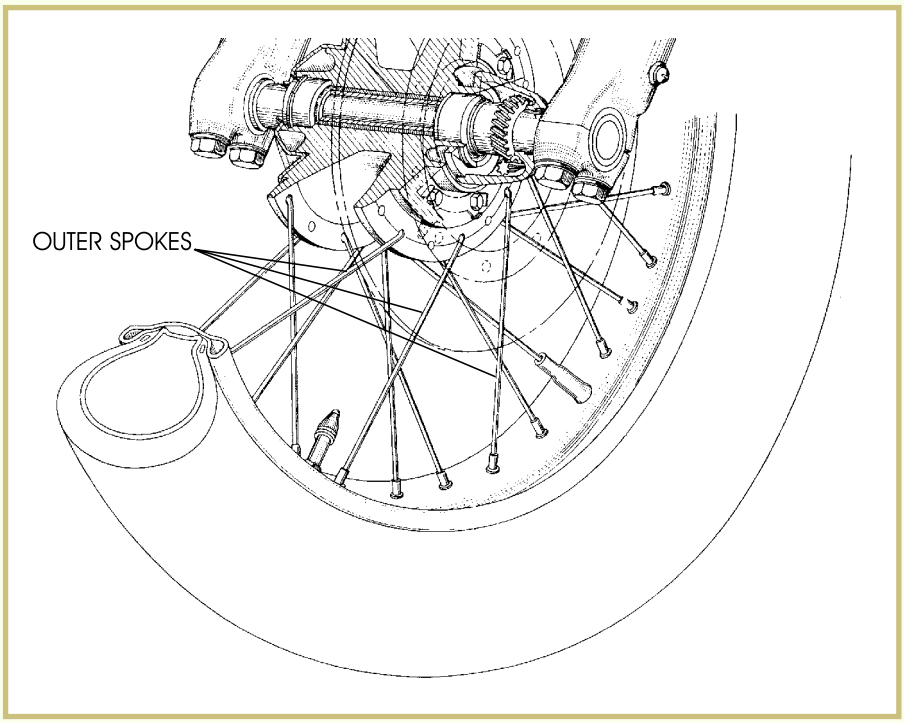

FIGURE 41—This illustration shows a 40-spoke wheel. Note that each of the outer spokes crosses four other spokes.

If you're replacing the rim of a damaged wheel, mark the hub for spoke direction before removing the rim from the spokes. Use a grease pencil to mark the direction of the old spoke on the hub. The direction of the spokes should be the same after you've replaced the rim.

Truing the Wheel

After you've installed all the spokes, you're ready to true the wheel. Truing a wheel consists of tightening each spoke so the wheel rolls straight.

A wheel-truing jig can be a valuable aid because it holds the wheel as you tighten the spokes. This type of jig can be purchased from motorcycle tool supply companies and also from some wholesale parts distributors.

You can make a suitable jig from a piece of metal bent in a U shape wide enough to allow the wheel to fit into the U. Cut a notch or hole at the top of each side of the U to hold the axle. Next, attach a dial indicator so the indicator rests on the rim and allows you to read the run-out of the rim as you tighten the wheel. Run-out is the side-to-side wobble as the wheel turns.

With the axle mounted in your jig and the rim free to be rotated, start at the valve stem hole and finger-tighten the nipples of the four spokes on each side of the valve stem. Turn the wheel 180 degrees and snug the eight spokes directly opposite the eight spokes you just tightened. Next, turn the wheel 90 degrees and snug another eight

spokes. Repeat turning the wheel and tightening spokes in a similar pattern until all spokes are snug.

Using your dial indicator, check the *elliptical run-out* of the rim, as shown in Figure 42. If you find a high spot, loosen the spokes directly opposite the indicated high spot and tighten the spokes at the high spot. Recheck the elliptical run-out. Repeat loosening and tightening of the low and high areas until the rim spins in a perfect circle.

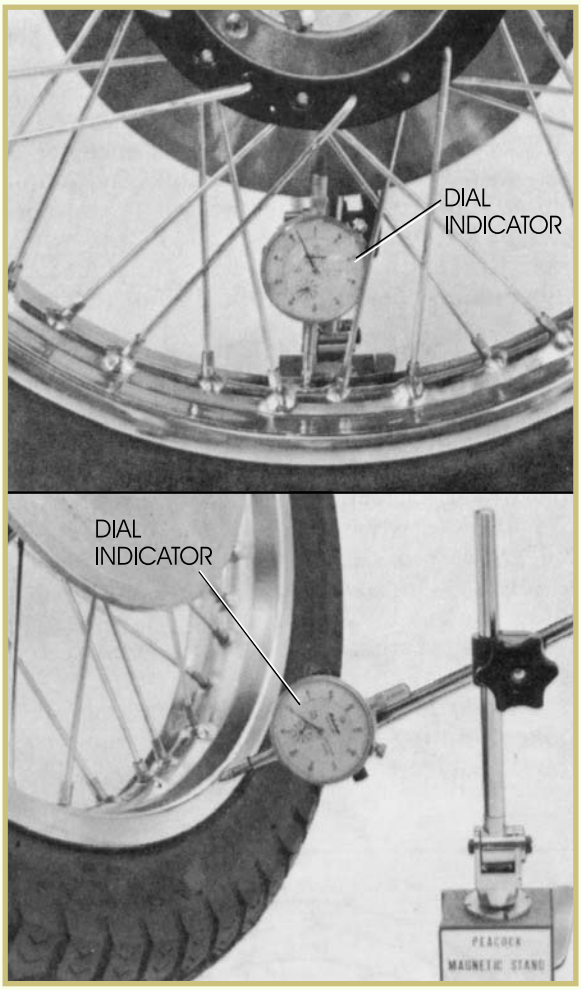

FIGURE 42—This illustration shows how to check the wheel rim for trueness. The top picture shows how to measure elliptical run-out (wheel hop). The bottom picture shows how to measure wheel side-to-side run-out (wobble).

Move the dial indicator to measure side-to-side run-out (wobble), as shown in Figure 42. To correct side wobble, loosen the spokes on the side that the rim wobbles toward and tighten the spokes on the side away from the wobble. Adjust the spoke tension as necessary by turning the nipples until the wheel runs true. When you're finished, be sure that all spokes are tight.

Remember, if you increase the torque on one spoke, you've also increased the tension on the spokes opposite the one you tightened; therefore, you must make the necessary adjustment on the opposite spokes.

Road Test 3

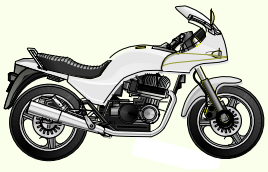

1. *True or False*? You should tighten each spoke completely as you're installing it onto the rim.

2. The angled wire spokes of a motorcycle wheel support the stress between the hub and rim of the wheel mainly during _____ and _____.

3. How many spokes are usually found in a motorcycle wheel?

   _____

4. *True or False?* Outer spokes are laced over inner spokes.

5. What tool is used to check the side-to-side run-out on a spoke wheel?

   _____

Check your answers with those on page 51.

ATV BRAKES, TIRES, AND WHEELS

ATVs may use either a disc or drum braking system. Disc-brake systems operate from hydraulic pressure produced by a master cylinder. Drum-brake systems can be either hydraulic or cable operated. Both the ATV disc and drum braking systems operate virtually identically to motorcycle systems. The tire and wheels used on ATVs, however, are designed differently from those on motorcycles.

Servicing ATV Drum Brakes

ATV drum brakes are serviced in the same way as motorcycle drum brakes. The components of a typical ATV cable-operated drum-brake system are shown in Figure 43.

The following procedure contains the general steps needed to service ATV drum brakes. Refer to the applicable service guide for detailed service information and specifications.

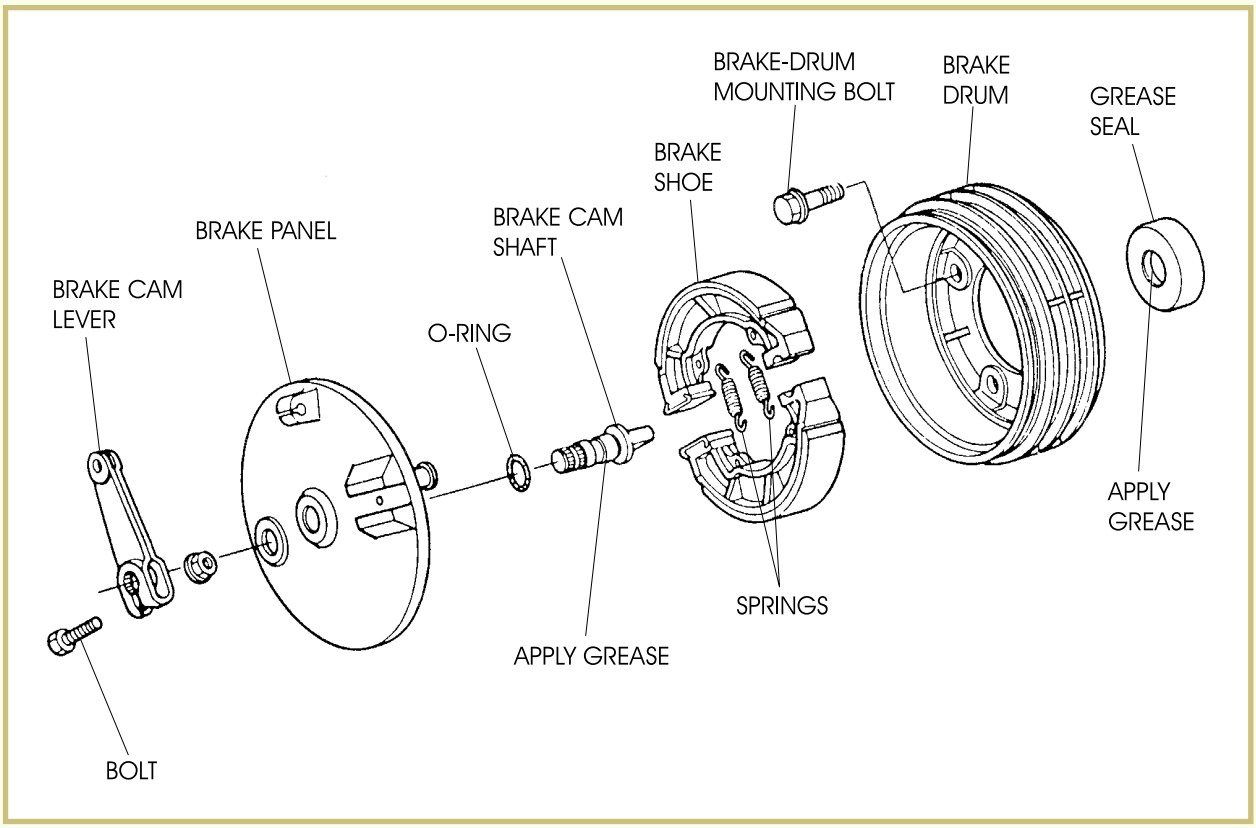

FIGURE 43—Exploded View of an ATV Drum-Brake Assembly (Courtesy Kawasaki Motor Corp., U.S.A.)

1. Disassemble the drum brake.
2. Clean, inspect, and measure the inner diameter of the brake drum.
3. Replace the brake drums if there are any signs of extreme wear or deep gouges in the inner surface of the drum.
4. Remove any small scratches from the drum surface, using an emery cloth.
5. Remove the brake shoes and inspect them for damage or wear. To determine the condition of the brake-shoe lining, measure the lining thickness (Figure 44).
6. Replace the brake shoes as a set if the lining thickness is less than the specified wear limit (usually about 2 mm). If the lining thickness is within specifications, clean the drum and shoes with a non-oil-based solvent.
7. Reassemble the brake assembly.

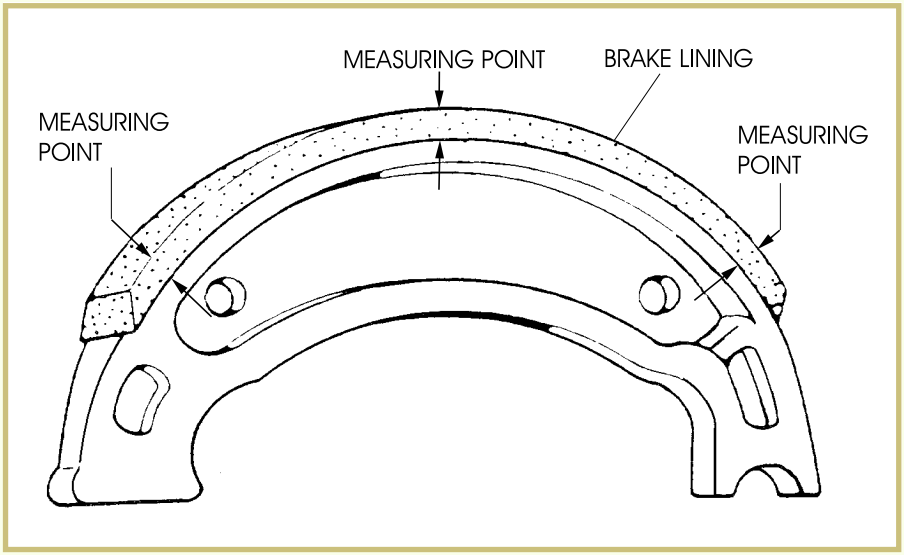

FIGURE 44—Three measurements should be taken to determine the wear of a drum-brake shoe. (Image courtesy of Yamaha Motor Corporation, U.S.A.)

Servicing ATV Disc Brakes

ATV disc-brake service is similar to that for motorcycle disc brakes. Figure 45 shows an exploded view of the components of a typical ATV hydraulic-brake caliper.

Servicing ATV disc brakes is the same as we discussed for motorcycles. The following procedure contains the general steps to service ATV disc brakes. Refer to the applicable service guide for detailed service information and specifications.

1. Determine the condition of the disc-brake pads by measuring the lining thickness (Figure 46). Replace the brake pads as a set if the thickness is less than the specified wear limit.
2. Measure the disc thickness. To determine disc thickness, measure it in at least three places on the rotor using a micrometer. If the thickness is less than the minimum specification, replace the disc.
3. Using a dial indicator, measure the run-out of the rotor. If the rotor thickness is less than the minimum specification or the run-out exceeds its specification, replace the brake rotor.

FLAT WASHER
BANJO BOLT
BLEED VALVE
DUST SEAL
FLUID SEAL
CALIPER PISTON
ANTI-RATTLE SPRING
CALIPER
DUST COVER
PAD
PAD
CALIPER MOUNTING BOLT
CALIPER HOLDER SHAFT

FIGURE 45—The ATV brake caliper is virtually identical to a motorcycle caliper. (Courtesy Kawasaki Motor Corp., U.S.A.)

FIGURE 46—Some disc-brake pads give a specification for lining thickness as shown here. (Courtesy Kawasaki Motor Corp., U.S.A.)

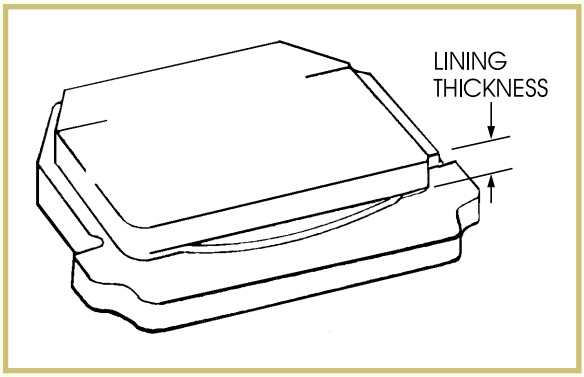

ATV Hydraulic-Brake Systems

Some ATV models use brake systems operated by hydraulic pressure rather than by cable. The hydraulic pressure is produced by a master cylinder that's operator controlled (Figure 47).

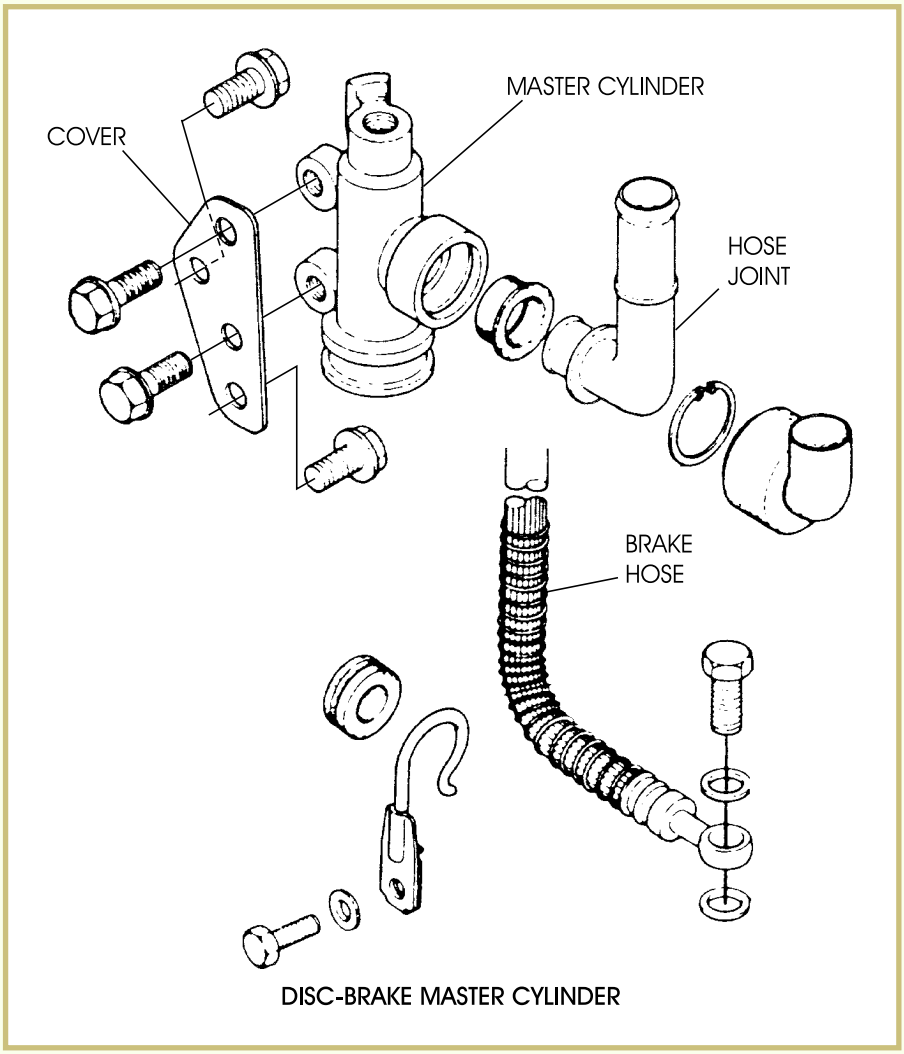

FIGURE 47—The operating components of an ATV hydraulic-brake master cylinder are identical to those found on a motorcycle master cylinder. (Courtesy Kawasaki Motor Corp., U.S.A.)

Servicing an ATV master cylinder is identical to servicing a motorcycle master cylinder. Routine maintenance of the hydraulic-brake system includes maintaining the brake-fluid level and ensuring proper free play of 4 to 5 mm at the front brake lever and about 10 mm at the rear brake pedal.

If air is present in the brake lines (usually indicated by a spongy feeling at the brake controls), the brake system must be bled. Use the same procedure as we described earlier for motorcycles. Remember to keep an ample supply of brake fluid in the reservoir. Figure 48 serves as a reminder of the steps involved.

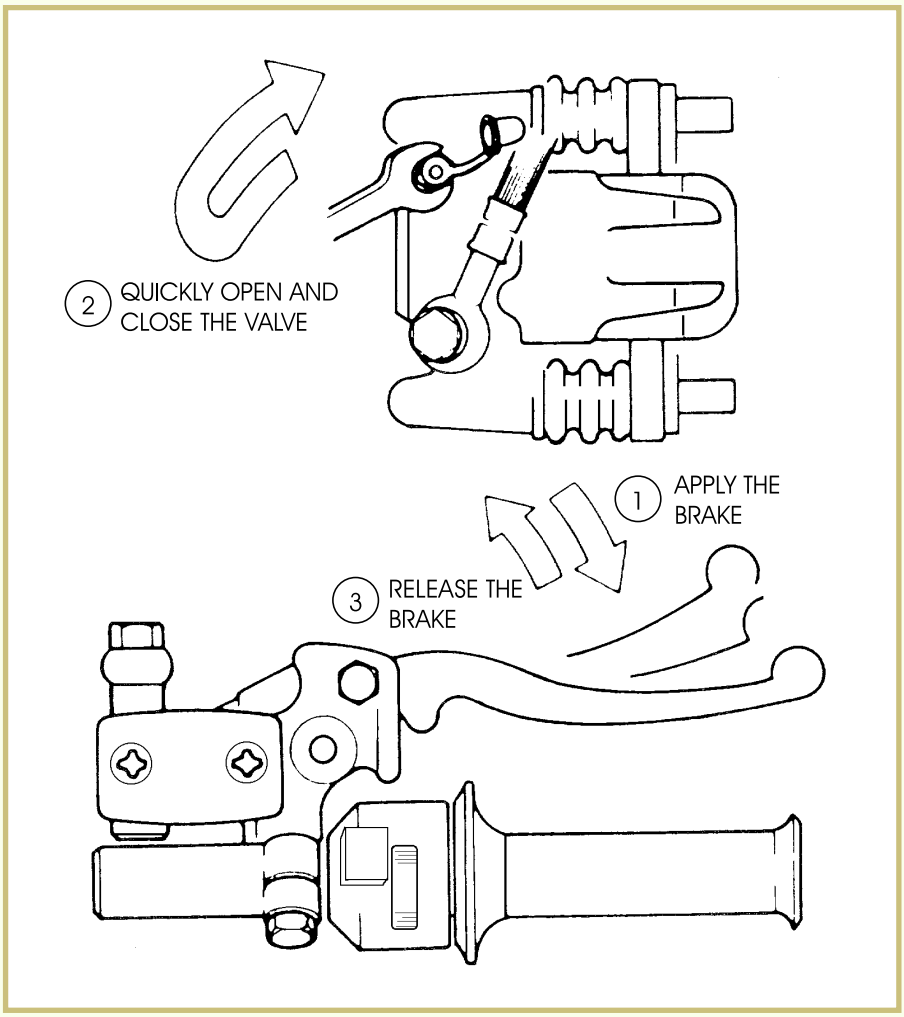

FIGURE 48—The illustration summarizes the procedure for bleeding air from the brake system. (Courtesy Kawasaki Motor Corp., U.S.A.)

ATV Wheels and Tires

The wheels on 3-wheel and 4-wheel ATVs are basically the same. A typical ATV wheel assembly is shown in Figure 49.

When replacing tires on an ATV, you should always follow the manufacturer's recommended tire size. ATV tires have size markings on the side wall of the tire, as shown in Figure 50.

Inspecting an ATV Wheel

The following procedure contains the general steps to inspect an ATV wheel assembly. Refer to the applicable service guide for detailed information and specifications.

FIGURE 49—An Exploded View of a Typical ATV Wheel Assembly (Courtesy Kawasaki Motor Corp., U.S.A.)

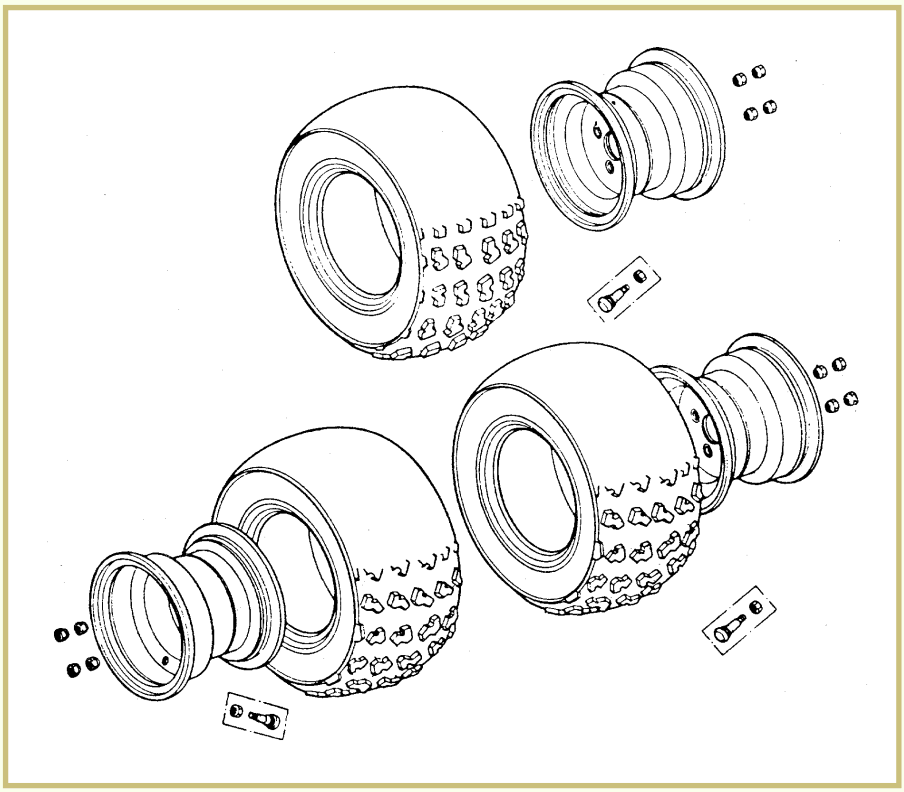

FIGURE 50—The markings on an ATV tire tell you that the tire is designed specifically for an ATV and give you the tire diameter, tire width, rim diameter, and the operating-pressure range.

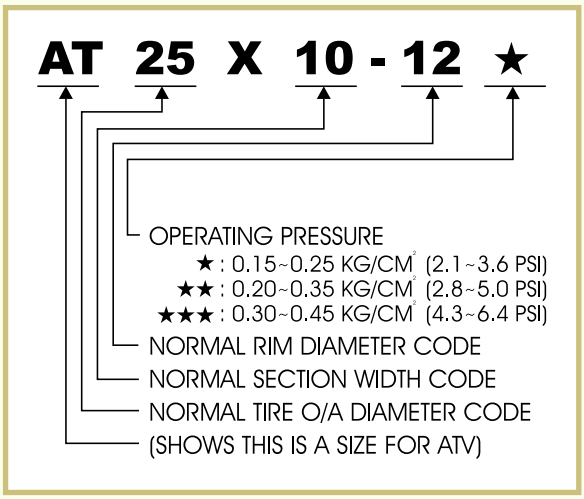

1. Place the ATV on a stand to raise the wheel off the ground.
2. Check the tire and rims for signs of excessive wear or damage. Replace the tire or rim if necessary.
3. Use a dial indicator to measure the wheel run-out, as shown in Figure 51. If the vertical and lateral run-out measurements exceed the service limits as stated in the service guide, check for a bent wheel, axle, or defective wheel bearing.

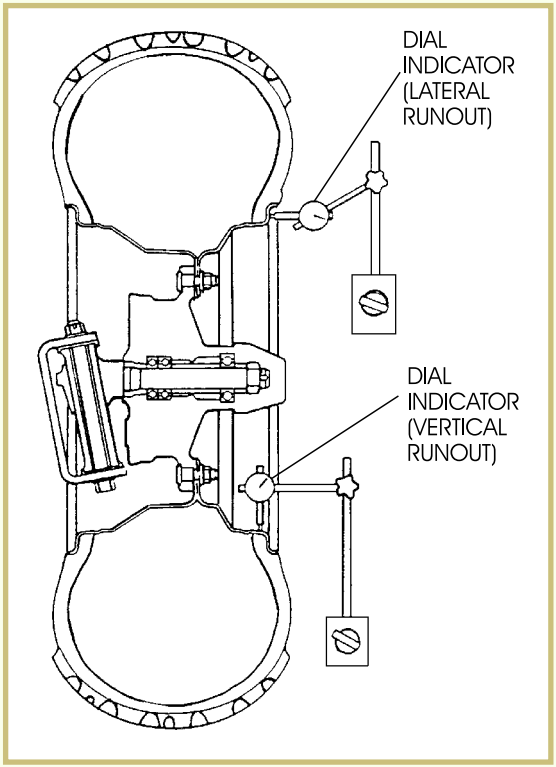

FIGURE 51—This cutaway shows measuring for ATV rim run-out. The dial indicator at the top is measuring lateral run-out. The dial indicator at the bottom is measuring vertical run-out. (Image courtesy of Yamaha Motor Corporation, U.S.A.)

Replacing ATV Front-Wheel Bearings

Use the following procedure to replace the front-wheel bearings on an ATV.

1. Unscrew the wheel nuts.
2. Remove the front wheel.
3. Use a drift to remove the wheel bearings, as shown in Figure 52.

Note: Never reuse bearings. When bearings are removed, always replace them with new ones.

4. Pack the new wheel bearings with a high-quality bearing grease.
5. Use the special bearing driver to reinstall the wheel bearings.
6. Install the wheel on the ATV and secure it with wheel nuts.

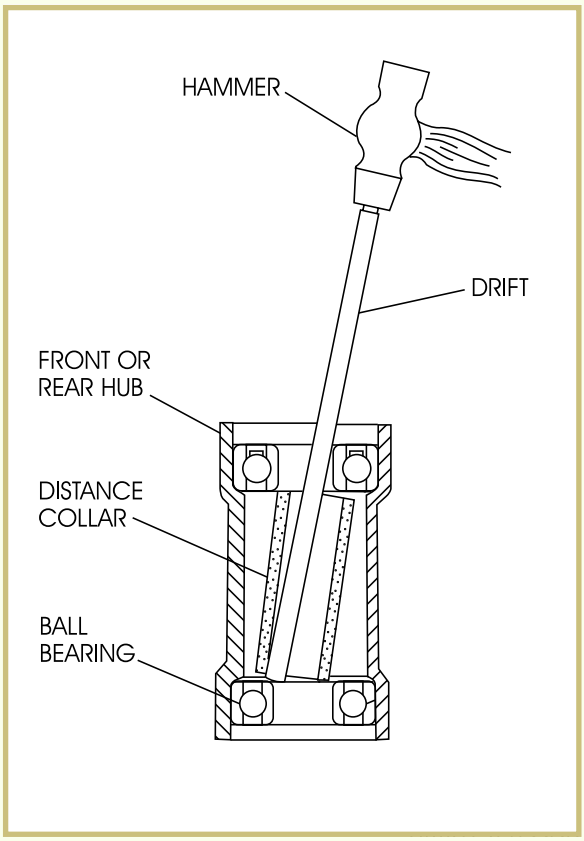

FIGURE 52—Removing the wheel bearings from an ATV wheel hub requires the use of a hammer and a drift.
(Courtesy Kawasaki Motor Corp., U.S.A.)

Changing a Worn or Punctured Tire

While repairing ATVs, it's often necessary to change a worn or punctured tire. Use the following procedure to remove a tire and inspect the rim for damage.

1. Identify the valve stem position with chalk mark on the tire.
2. Remove the valve-stem core to deflate the tire.
3. Lubricate the rim ranges and tire beads with a tire-mounting lubricant.
4. Center the well of the rim.
5. Lubricate the ends of two tire tools with rubber lubricant.
6. Starting on each side of the valve stem, begin to pry the first bead off the rim. Work around the rim with the tire tools until the bead is completely removed from the rim. Remove the other bead from the rim using the same procedure.
7. Repair any punctures using a tubeless tire kit. If the tire is excessively worn or damaged, replace the tire.

8. Check for dents on both sides of the wheel rim. Replace the rim if it's dented.
9. Make sure that the sealing surfaces on the inside edges of the rim flanges are smooth and free of rust, scratches, or nicks. Use a fine emery cloth for cleaning the surfaces, if necessary.

Installing a Tire on a Rim

Use the following procedure to install an ATV tire on the rim.

1. Lubricate the beads on the tire and the rim flanges with a tire-mounting lubricant.
2. Position the tire on the rim so the chalk mark you made on the side of the tire aligns with the valve stem.
3. Starting at the side opposite the valve stem, slide the bead over the rim. Use the tire tools to install the remainder of the bead. Use the same procedure to install the other bead.
4. Replace the valve-stem core.
5. Inflate the tire with the recommended air pressure, making sure the beads seat evenly on both sides of the rim.

Remounting the Wheels

When you remount the wheels on the ATV, here are some important points to remember.

- Coat the axle with a thin layer of grease.
- Place the wheel on the hub with the valve stem facing outward.
- Install the lug nuts with the chamfer side facing in.

Removing and Inspecting the Rear-Wheel Bearings

The procedure for removing rear-wheel bearings is similar to that used for the front-wheel bearings except that there are many more parts to be removed beforehand. We recommended that you carefully follow the disassembly and reassembly procedures in the service manual for the particular ATV model you're working on. After you've removed the bearings,

1. Use a set of V-blocks and a dial indicator to measure the rear-axle run-out.
2. Replace the axle if the run-out exceeds the factory service limit.

3. Grease the dust seals at each end of the axle.
4. Maintain the torque specifications during reassembly of the rear axle.

Road Test 4

1. Name the two types of braking systems used on ATVs.

   _____

2. What material can be used to help remove small scratches in the wheel-drum surface?

   _____

3. How do you determine the amount of wear on a drum-brake shoe?

   _____

4. What tool is used to determine disc thickness?

   _____

5. *True or False*? The operation of ATV braking systems is completely different from that of motorcycle braking systems.

Check your answers with those on page 51.

Road Test Answers

1

1. No. Worn brake shoes wouldn't drag and by themselves wouldn't interfere with releasing the wheel.
2. The brake cam
3. Equally for both
4. Pads on the sides of the disc are squeezed against the disc, creating friction and preventing the wheel from turning freely.
5. The brake lever becomes spongy.
6. When the motorcycle rider applies the front or rear brakes hard enough to lock up the wheel assemblies

2

1. False
2. Spoke wheel and non-spoke wheel
3. Assembled wheels
4. Drift and hammer
5. True
6. True
7. Cast
8. False

3

1. False
2. acceleration, braking
3. 36 or 40 spokes
4. True
5. Dial indicator

4

1. Disc and drum
2. Emery cloth
3. Measure the thickness of the shoe.
4. Micrometer
5. False

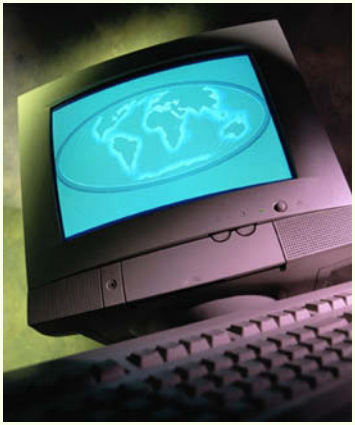

ONLINE EXAMINATION

For the online exam, you must use this

EXAMINATION NUMBER:

03301700

When you're confident that you've mastered the material in your studies, you can complete your examination online. Follow these instructions:

1. Write down the eight-digit examination number shown in the box above.
2. Click the **Back** button on your browser.
3. Click the **Take an Exam** button near the top of the screen.
4. Type in the eight-digit examination number.