Study Unit

Frames, Steering, and Suspension

By

Ed Abdo

About the Author

Edward Abdo has been actively involved in the motorcycle and ATV industry for more than 25 years. He received factory training from Honda, Kawasaki, Suzuki, and Yamaha training schools. He has worked as a motorcycle technician, service manager, and Service/Parts department director.

After being a chief instructor for several years, Ed is now the Curriculum Development Manager for the Motorcycle Mechanics Institute in Phoenix, Arizona. He is also a contract instructor and administrator for American Honda's Motorcycle Service Education Department.

Preview

This study unit introduces motorcycle and ATV frame design, motorcycle wheel alignment, and front and rear suspension designs. You'll start by learning the design and description of frames and suspension systems, including motorcycle wheel-alignment checks. Then, you'll learn the important steps you must take to inspect and to perform maintenance procedures on these systems. Throughout our discussions of system designs, inspection, alignment, and maintenance steps, we'll provide you with information on the function of certain basic frame and suspension-system components.

When you complete this study unit, you'll be able to

- Identify the different frame designs used by motorcycle manufacturers
- Understand how to perform frame and wheel inspection and alignment procedures
- Identify basic front-fork suspension components
- Inspect and perform service procedures on front-fork components
- Identify rear-suspension systems used by motorcycle manufacturers
- Inspect and perform service procedures on rear-suspension components
- Identify ATV steering and suspension systems
- Inspect and perform service procedures on ATV steering and suspension systems

Contents

Frames, Steering, and Suspension

INTRODUCTION

This study unit deals with three important, interrelated motorcycle and ATV systems: the frame, the wheels and their alignment, and the suspension. As a knowledgeable motorcycle and ATV technician, you must thoroughly understand all these systems. Correctly aligned and serviced, these systems provide comfort and safety to the rider.

The frame holds all the motorcycle and ATV parts together, directly affecting both steering and wheel alignment. In this study unit, you'll learn to identify some frame designs. You'll learn to identify frame damage and how and when to repair it or replace the damaged frame. Finally, you'll learn how modifying the frame design changes the way a motorcycle handles on the road and in the field.

The motorcycle's wheels and their alignment are important for a rider's comfort and safety. In this study unit, you'll learn to inspect, align, service, and repair the various parts that comprise the wheels and steering system.

Steering and wheel alignment work with the suspension system to give the rider a smooth, comfortable ride over rough road surfaces and terrain without transmitting a great amount of shock to the rider. The suspension connects the main body of the motorcycle with the wheels and, if it's working properly, provides as smooth a ride as possible. In this study unit, you'll learn to inspect, service, and repair the various parts that comprise the suspension system.

To develop faster and lighter motorcycles, manufacturers have made significant changes in frame geometry, shock-absorber capabilities, and swing-arm arrangements as well as frame and suspension designs. You must learn basic frame and suspension theory and design in order to be able to understand these changes. This study unit will help you understand and apply this information.

MOTORCYCLE FRAMES

The frame holds all the other parts together. It must be straight to provide the proper wheel alignment and steering. It must provide a secure mounting for the steering. The steering must turn easily so it won't exhaust the rider, yet it must be tight enough to provide good handling characteristics. The frame must be strong to support the weight of the rider, the engine, and all other motorcycle components.

Frame Design

Manufacturers use many frame configurations, depending on how the motorcycle will be used. Stress and vibration from both the suspension and the engine act against the frame. These forces are major factors when a manufacturer is designing a frame whether it's for street use, track use, or dirt road use. The frame must also be lightweight for ease of handling.

Frame design also depends on such factors as engine displacement, intended use of the motorcycle, cost, visual appeal, and materials. Most frames are made of steel. But aluminum is used in frames for sport-type motorcycles and for off-road, racing-style motorcycles. Frames made of aluminum alloys are lighter than steel frames. Both steel and aluminum frames have the same strength rating. Aluminum frames are bulkier and more expensive to produce than steel frames.

Manufacturers design frames using a variety of tubing in different shapes. Different castings and forgings combine to form the optimal frame design for a given model's needs. Many motorcycle frames are made almost entirely of round, steel tubing of various outside diameters and thicknesses. Frames are also made from square tubing. Many steel and aluminum frames include some casting or pressed steel or aluminum sections in order to form strong, compact joining areas for major attachment points. Round tubing has the same strength in all directions, but rectangular and square tubing has different strength ratings in different directions. For example, if the frame's maximum strength is needed in a vertical direction, but the strength in the horizontal direction isn't as important to the frame design, manufacturers choose rectangular tubing with greater strength in those areas. In addition, a frame's weight can be changed by changing the tubing design. Frames are usually reinforced at high-stress points with *gussets* (braces) made of special metals to provide strength and light weight.

Frames are classified according to their basic structure. Figure 1 shows five different frame designs used in the motorcycle industry.

Single-cradle frame. This frame design has one down tube and one main pipe. The structural material of the frame surrounds the engine. This frame is widely used for lightweight, off-road motorcycles as well as some midrange, on-road, sport-type motorcycles, which require strength and easy service.

Double-cradle frame. This frame is similar to the single-cradle frame. The major difference is that the double-cradle frame has two down tubes and two main pipes. The double main pipes and down tubes increase frame strength. As you can see in Figure 1, a section of the down tube can be removed on some models to help the technician remove the engine. Larger-displacement, on-road motorcycles commonly use this design.

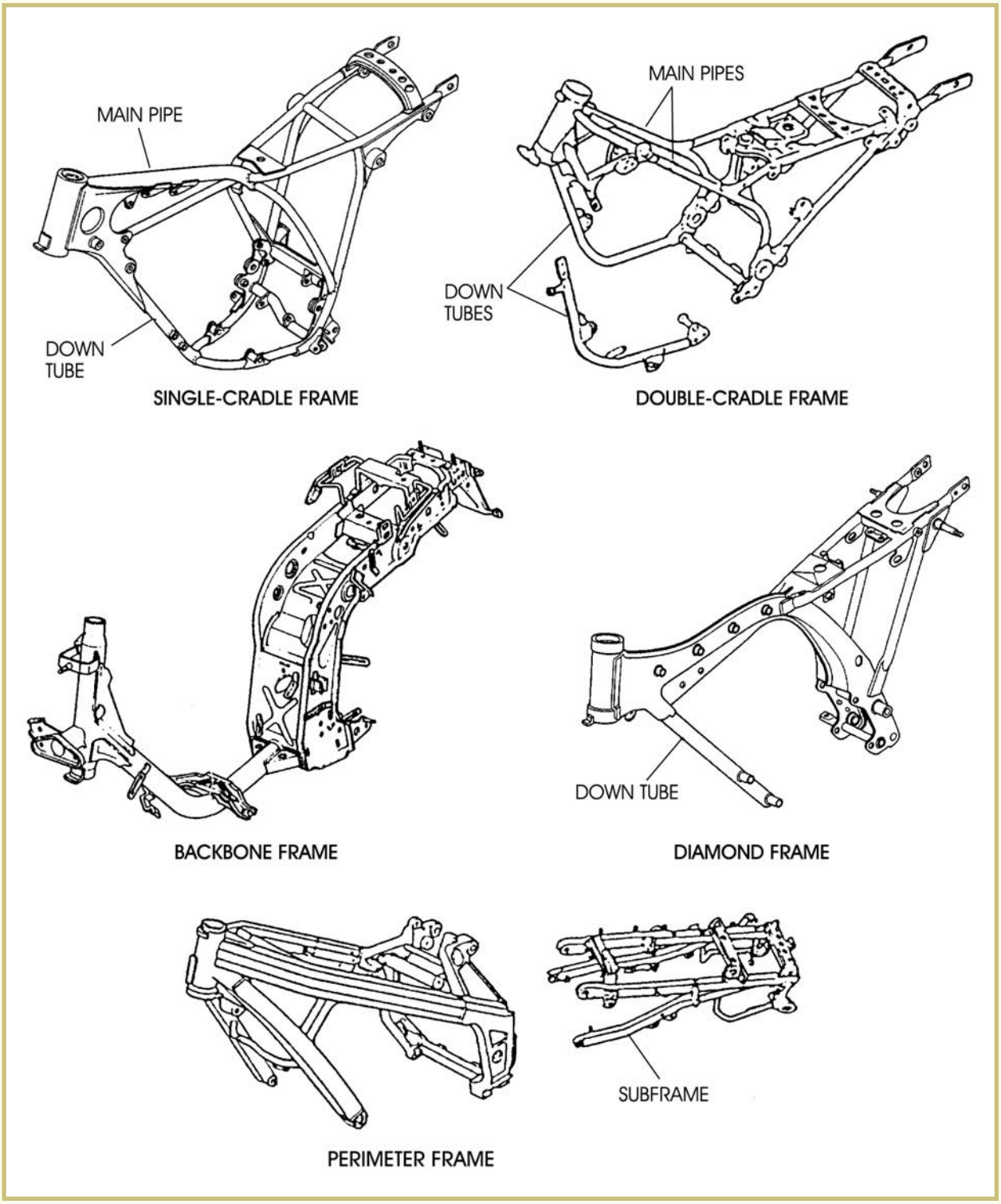

FIGURE 1—Five motorcycle frame designs are shown here. (Copyright by American Honda Motor Co., Inc, and reprinted with permission)

Backbone frame. This frame design is made of steel tubing and pressed plates and is used mostly on scooters and other small- engine-displacement motorcycles. This frame design allows motorcycle manufacturers to produce motorcycles at a low cost with many design options.

Diamond frame. On this frame design, the lower section of the down tube isn't connected to any other frame tubes. This design uses the engine as a part of the frame structure. When it's secured, the engine generates the extra, needed frame strength. In these situations, the engine is known to be a *stressed member* of the frame. Used primarily on small- to mid-sized motorcycles, this frame design is desirable because of its simple structural design, serviceability, and its light weight.

Perimeter frame. This frame was designed to minimize twisting of the steering neck by having the upper frame tubes at a wide angle to the neck. The upper frame tubes also wrap around the perimeter of the engine, further increasing the stiffness of the overall frame. Manufacturers have recently begun constructing this frame of aluminum. Some, but not all, perimeter frames contain a removable subframe to improve service access. Primarily used on sport-type, on-road machines, these frames are now being used on some off-road bikes as well.

Frame Inspection

Although motorcycle frames generally don't require service by a technician, you should be prepared to inspect frames for damage to be certain the motorcycle is safe to ride. Frame repair is extremely difficult, and the straightening involved should be left to a frame-repair specialist. In fact, all manufacturers recommend that damaged frames be replaced.

Frame Alignment

As a technician, you'll need to know how to check frames for proper alignment. If the frame is bent, the wheels won't track properly. This means that when the motorcycle is going in a straight line, the rear wheel won't follow exactly in the *track* of the front wheel. Bent front forks or a bent swing arm can cause the wheels not to track. Your job is to determine which part is bent—frame, front fork, or swing arm—and then make repairs or replacements where necessary.

A quick way to determine if the frame has been damaged badly enough to require replacing is to inspect the surface of the frame tubing. Generally, if the tubing has been bent severely, the paint on the frame at the point of the bend will have stretched or buckled. Carefully inspect the frame joints to be sure the weld hasn't broken. If either condition exists, the frame is bent. Send the frame to a frame shop to determine if repairs can be made or if replacement is necessary.

If the paint or weld doesn't show damage and you still suspect that the frame is bent, remove all the parts from the frame and inspect it yourself. The parts you'll remove include the fuel tank, seat, fairing, wiring, etc. At this point, you'll still save time and trouble by sending the frame to a specialist because you must have special tools to inspect and repair a damaged motorcycle frame.

Tools Needed

If you choose to go ahead and inspect the frame yourself, the tools you'll need are

- Engineer's checking table (a table that has a smooth, flat surface approximately 4 feet by 6 feet)
- Adjustable-height gauge (preferably the Vernier type)
- Two or more V-blocks
- Square
- Some large C-clamps
- Set of head-pipe bearing races
- Bar that fits the internal hole of the bearing races

Procedures

The procedures in this study unit are general in nature and not intended to be used for actual disassembly and repair. Their purpose is to familiarize you with the types of activities you'll encounter. Always refer to the appropriate motorcycle or ATV service guide for maintenance information. The service guide contains all the information to do the job correctly, including detailed instructions for the specific make and model of motorcycle or ATV, special tools, and service tips. Above all, the service guide contains the appropriate safety information.

Checking for a Bent Front Section

Follow these steps to check for a bent front section (Figure 2):

1. Set the frame on its side on the table.
2. Insert the bearing races, bearings, and bar into the head pipe.
3. Block the head pipe with the V-block so the centerline of the bar is parallel with the table. The *centerline* is an imaginary line drawn through the center of the tube or pipe.
4. Block the top frame pipe so the centerline of the pipe is at the same height from the table as the centerline of the bar through the head pipe.
5. Use the adjustable-height gauge to check that the parts of the frame are parallel.

6. Clamp the frame to the table, using care that all measurements (centerlines of the head-pipe bar and top rail) remain the same.
7. Insert a rod that just fits through the swing-arm mount (swing-arm axle). Use the square to ensure the centerline of this bar is perpendicular to the centerline of the bar through the head pipe and the centerline of the top frame bar.

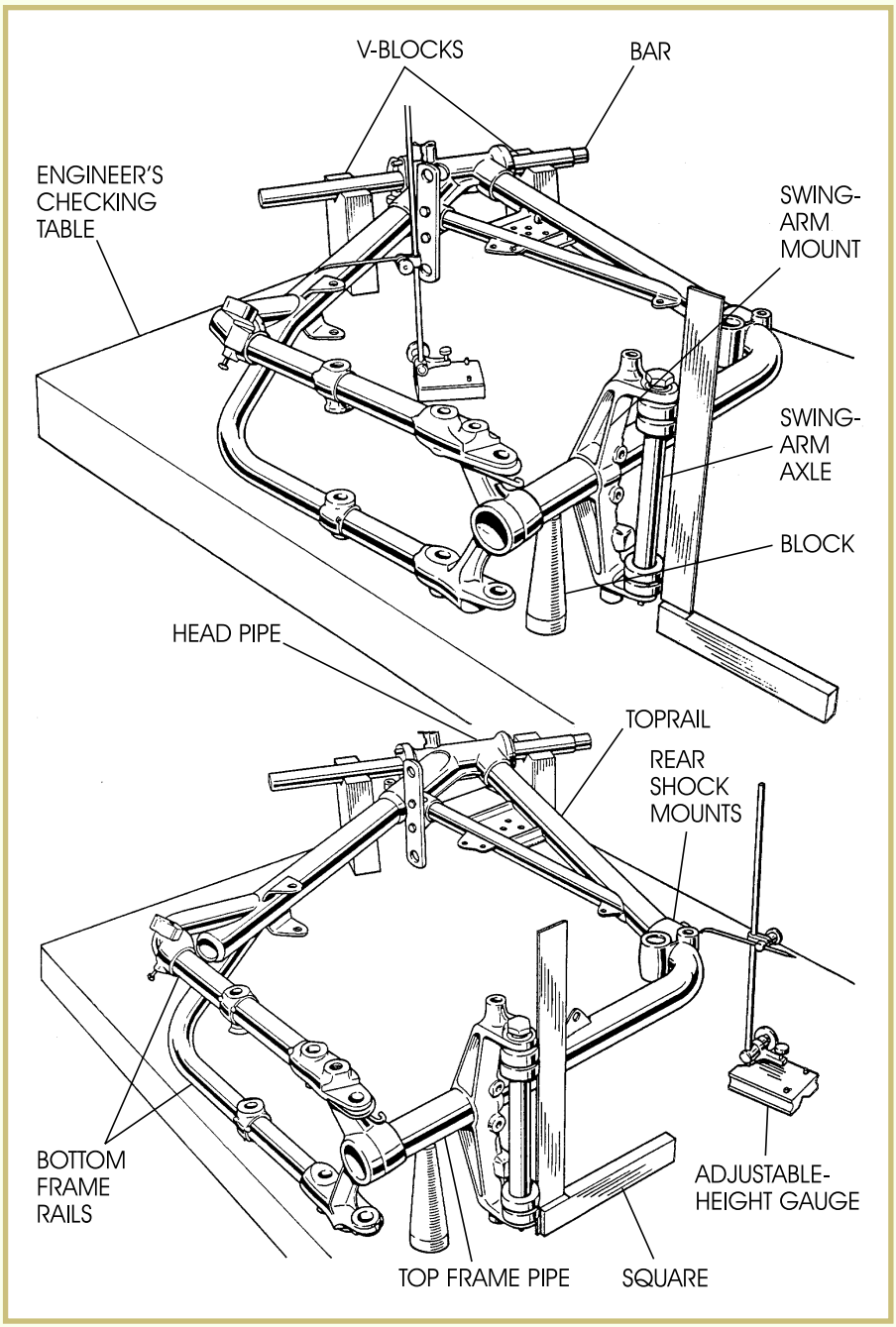

FIGURE 2—Shown is the frame front section being checked with a square and an adjustable-height gauge. (Copyright by American Honda Motor Co., Inc. and reprinted with permission)

If you find that the centerline of the bar through the swing arm isn't perpendicular to the centerline of the bar through the head pipe, the frame is bent. Usually this bend will be in the front frame section. A frame-repair specialist must straighten it, or you must replace the damaged frame with a new one.

Checking for a Bent Rear Section

To check for a bent rear frame section, position and clamp the frame so the centerline of the bottom frame rails is parallel to the tabletop. Locate the exact center of the space between the two top frame rails at the rear shock mounts. An imaginary line drawn from one rear shock absorber to the other should cross the top rail centerline at a 90° angle.

The holes for mounting the motorcycle parts must be at specified angles and distances. These specifications aren't usually in the factory-supplied shop manual, and they're quite complex. That's why we recommend you have a frame-repair specialist do this type of repair.

Frame Modifications

You may encounter a *chopper,* which is a motorcycle with a modified frame. A major part of chopping the motorcycle's frame consists of changing the angle of the head-pipe joint where it attaches to the top frame rail and the front-frame down tube. Changing the angle of these tube joints changes the angle of the steering-stem axis in relation to the ground. This angle is called the steering *castor* (or *rake*) (Figure 3). Changing the angle of the head-tube joint also changes the steering trail. *Trail* is a word used to identify the distance along the ground between an imaginary vertical line through the center of the front axle to the ground and another line through the center of the steering stem to the ground.

Changing both the castor (or rake) and trail directly affects both steering ease and the stability of the motorcycle. Often, motorcycles that have been chopped also have the length of the front-fork tubes increased. This is usually done in conjunction with changing the head-pipe angle.

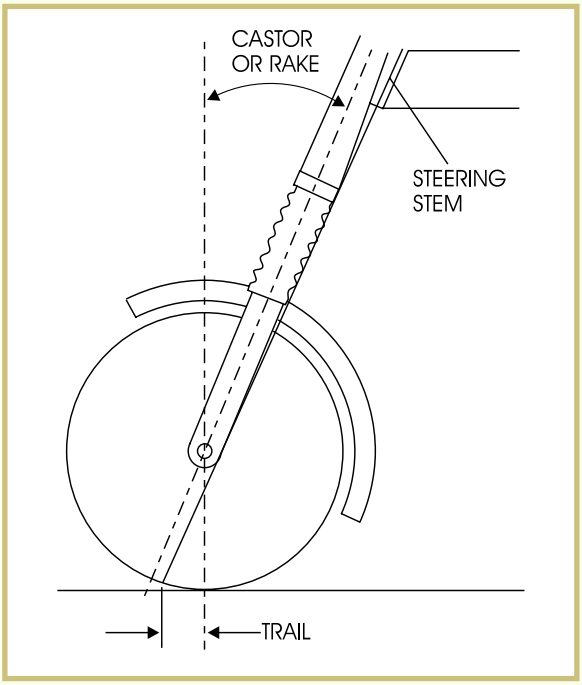

FIGURE 3—This drawing shows how castor (or rake) and trail are measured.

When you increase the castor (or rake), you increase the trail. This change lengthens the wheel base and makes the motorcycle more difficult to turn. Therefore, choppers are well suited for riding on straight highways. However, it's possible to change the castor (or rake) and trail too much. When this happens, the steering is very slow and requires a lot of pressure to turn the wheel until the wheel reaches a 15° to 25° angle from the frame line. Then, the wheel tends to turn sharply to a 90° angle, and it requires a lot of pressure on the handlebars to prevent it from completing the turn to a 90° angle. This makes steering at slow speeds much more difficult.

Motorcycles that have the setting reversed [small castor (or rake), smaller trail] are much easier to turn—the pressure on the handlebars can be very light. This reversed castor (or rake) and trail condition affects the bike's stability. The motorcycle is more difficult to hold in a straight line at higher speeds. Thus, most manufacturers install the head pipe at an angle that allows the castor (or rake) to be just large enough for off-road or average city driving, providing quick, light steering.

Any modification to the frame head angle, length of fork legs, or size of wheels and tires affects, to some extent, both the castor (or rake) and trail.

Most manufacturers make more than one size of motorcycle, each designed to be used for a basic purpose (dirt bikes, street bikes, etc.), along with some bikes designed for multiple uses. Motorcycle manufacturers don't recommend making any repairs or frame-design changes; but if frame work is to be done, remember that it should be done by an expert who knows metal, welding, and frame-design factors. The frame may be ruined by an inexperienced technician. In addition, a

dangerous situation may be created if the frame isn't correctly aligned or repaired.

Road Test 1

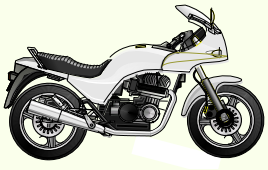

At the end of each section of *Frames, Steering, and Suspension*, you'll be asked to check your understanding of what you've just read by completing a "Road Test." Writing the answers to these questions will help you review what you've learned so far. Please complete *Road Test 1* now.

1. What is a gusset on a motorcycle frame?

   _____

2. Name five factors manufacturers consider when designing motorcycle frames.

   _____

3. *True or False?* Frames made of aluminum alloys are lighter than steel frames, but both have the same strength rating.

4. Name the frame design that has only one frame down tube.

   _____

5. Name the frame design that's made up of a combination of steel tubing and pressed plates.

   _____

6. Explain the centerline of the frame.

   _____

Check your answers with those on page 63.

MOTORCYCLE WHEEL ALIGNMENT

Correct alignment and adjustment of the steering, wheels, and frame are vital for the comfort and safety of the motorcyclist. It's necessary that you, the motorcycle technician, understand the importance of these adjustments and make a conscientious effort to be certain the motorcycle you're working on is properly aligned.

Motorcycle wheel alignment depends on four things:

- Front-fork alignment
- Swing-arm alignment
- Wheel-axle alignment
- Steering alignment

If you observe that the wheels aren't aligned, you should inspect the front forks and swing arm to determine if they're straight. These parts generally bend before the frame does, and they're easier to check than the frame. Severely bent forks should be replaced. Therefore, unless you can see obvious frame damage, be sure the forks and swing arm are straight before you begin the job of checking the frame.

Front-Fork Alignment

Inspecting the Front Forks for Damage

Forks that are less severely damaged may not show visible damage. For these cases, you can make a special tool to inspect the forks (Figure 4).

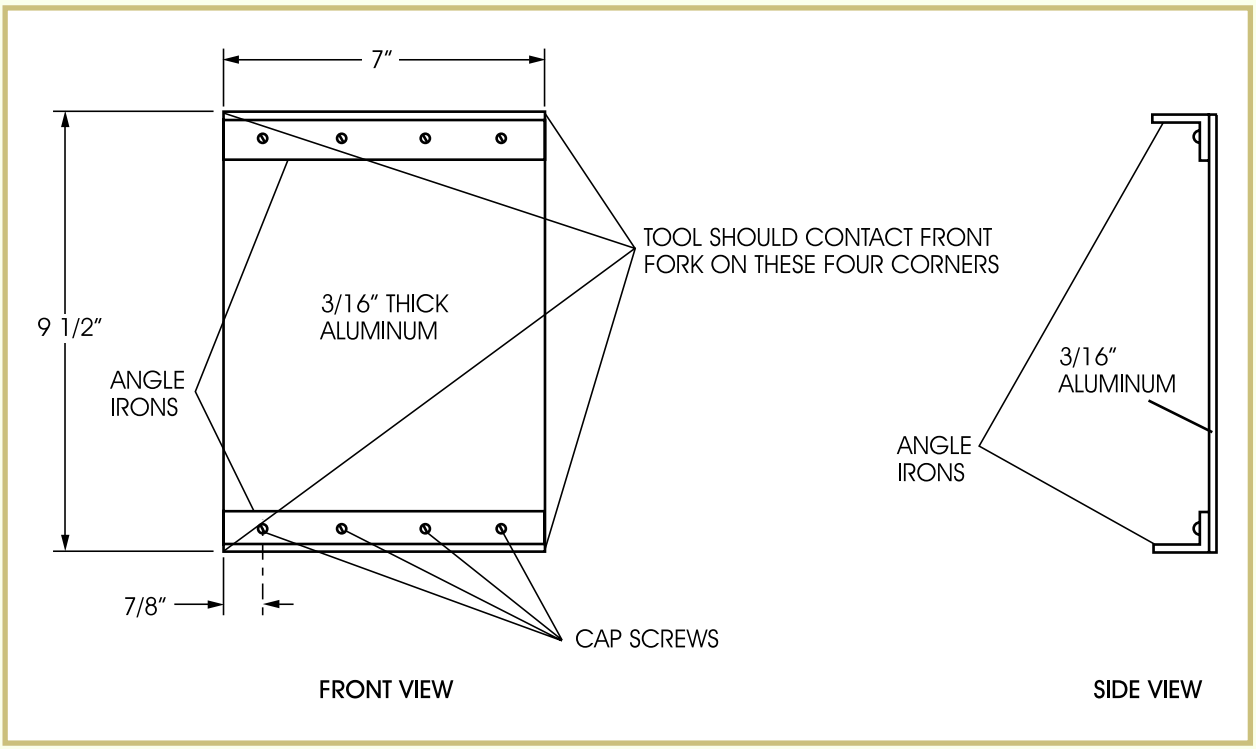

FIGURE 4—This diagram shows the special tool used to inspect the forks.

Making an Alignment Tool

Obtain a piece of aluminum that's $\frac{3}{16}$-in. thick and 9 $\frac{1}{2}$-in. long by 7-in. wide, and two 7-in. long $\frac{3}{4}$ in. by $\frac{3}{4}$ in. angle irons. Place one 7 in. angle iron across one edge of the 7 in. side of the aluminum plate and secure it with four equally spaced cap screws. The two outside screws should be $\frac{7}{8}$ in. from the edge. Place the other 7 in. angle iron on the opposite edge of the plate, and secure it in the same manner. These angle irons strengthen the aluminum plate and keep the plate flat. To

make this tool adjustable, drill holes through the aluminum plate so the angle irons are positioned parallel to each other at various distances apart. You can also cut hand holes as illustrated in Figure 5 to make it easy to hold.

Checking the Front Forks for Damage

To check the front forks for damage, remove the front wheel, fender, and other front-end components. Reinstall the axle in its proper position. Hold the tool shown in Figure 5 firmly against the front of the lower fork leg. If the forks are straight, all four corners of the angle iron will contact the forks. If the tool doesn't make contact at all four corners, you'll know that the forks aren't straight. To remedy this, loosen the fork-stem pinch bolt and the top-lug pinch bolt or cap nut. Use a soft mallet to tap the top lug sharply. This will cause the inner-fork stanchions to rotate slightly and align if they aren't severely bent.

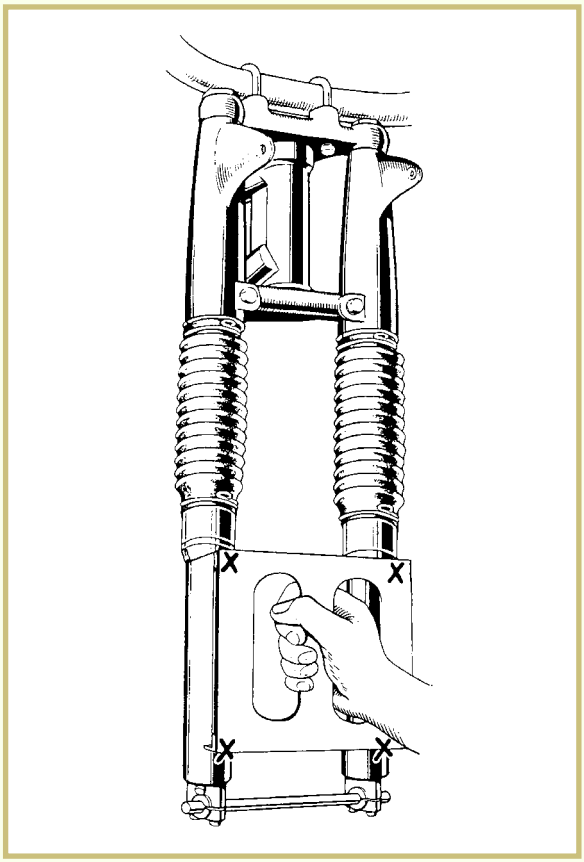

FIGURE 5—A special tool is being used to check the alignment of the front forks. The Xs mark the corners where the tool must contact the forks.

Check the alignment again with your tool. Tap the top lug in the correct direction until the forks align. Finally, tighten all bolts and recheck to be sure the pressure on the pinch bolt didn't cause distortion. If any one of the four corners of the tool has more than $\frac{1}{64}$ in. clearance between the angle iron and the fork leg, the inner-fork tube or stem and crown may be bent.

Swing-Arm Alignment

The rear wheel is linked to the motorcycle frame by the swing arm (Figure 6). The swing arm allows the rear wheel to move up and down as the suspension absorbs the different terrain the motorcycle is going over. The swing arm prevents the rear wheel from moving laterally. If the rear wheel doesn't align with the front wheel, check that the drive chain or belt adjusters are adjusted correctly (Figure 7).

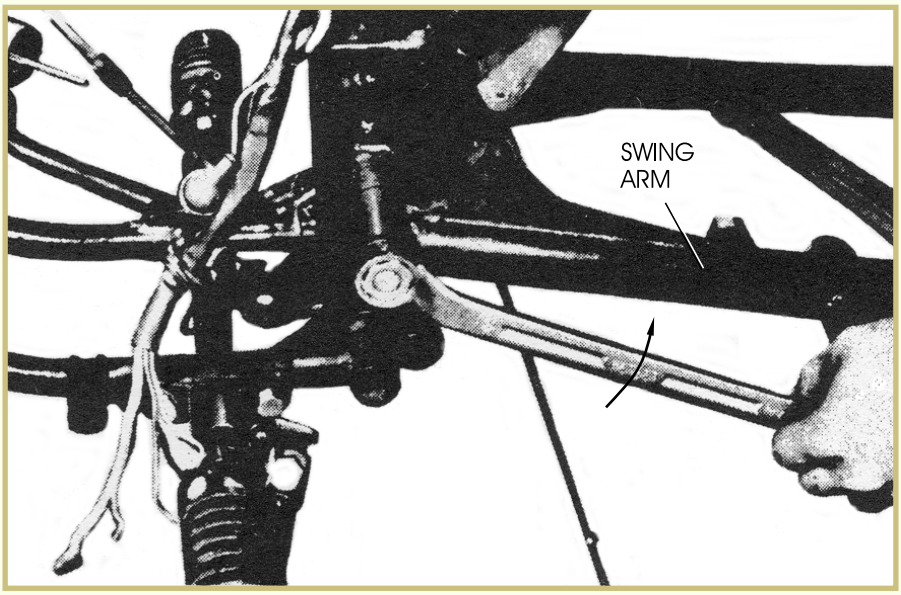

FIGURE 6—A swing arm is shown here. The rear wheel is linked to the swing arm, and the swing arm pivots up and down.

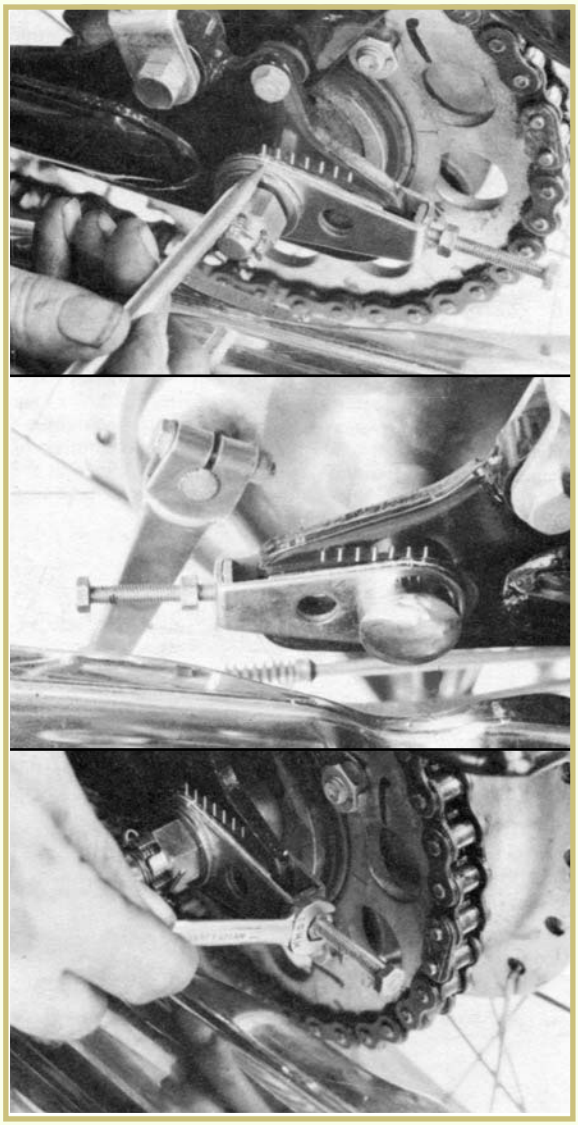

FIGURE 7—Chain adjusters must be properly adjusted to ensure proper rear-wheel alignment.

Inspecting the Swing Arm

If the rear-wheel alignment is correct, but the rear wheel still doesn't align with the front wheel, you must remove the rear wheel and disconnect the rear-suspension system. Place the motorcycle on a stand that holds it in a level and upright position. Be certain the motorcycle is level by measuring the distance from the floor to each side of the rear swing-arm bearing housing where it mounts to the frame. The distance should be equal on each side if the motorcycle is level with the floor. Remove the rear-wheel assembly and rear-suspension system. Place the axle bolt in the axle mount and brace the swing arm in its normal position by placing a block under the bolt. Due to the fact that the rear-suspension system has been removed, the swing arm will fall to the floor without the brace. Now, measure the distance between the floor and each side of the swing arm at the bottom of the

axle-mounting holes. The distance should be equal on each side, indicating that the two sides of the swing arm are parallel and the swing arm isn't bent. If the swing arm is bent, it must be replaced.

Wheel-Axle Alignment

Correct wheel-axle alignment requires that the technician be sure the wheels are installed both parallel and perpendicular to the centerline of the frame.

Imagine a line that runs directly through the center of the front fork to the center of the space between the rear swing arm. This is the centerline of the frame. Each wheel must be aligned so that the middle of the wheel is positioned on this centerline of the frame. Now imagine another line from the frame centerline directly to the ground. Each wheel must be parallel to this line.

Align the wheels by adjusting the position of the axle in its mounts. Normally, the front forks have only one way the axle can be mounted, and the axle is in the correct position if the forks and axle are straight.

The rear wheel can be mounted incorrectly if one side of the axle is adjusted forward of the other side. In this case, the wheel wouldn't be parallel with the frame and would cause the tire, chain, and sprocket to wear rapidly. This may also cause the steering to pull to the side because the rear wheel isn't following the front wheel (or *tracking*). To remedy this, the technician adjusts the position of the rear-wheel axle. This adjustment check was explained earlier in this study unit and illustrated in Figure 7.

The perpendicular alignment of both the front and rear wheels is necessary because a wheel that's slanted turns in the direction of the slant. This causes tires to wear off-center and causes the steering to pull to one side or the other. Swing arms that have one bent side will cause the rear wheel to slant.

Steering Alignment

The steering-stem bearings, positioned in the frame head pipe, must be lubricated and have the correct amount of play to allow easy turning of the front forks. Too-tight pressure on the bearings causes hard, notchy turning of the handlebars, creating incorrect steering alignment. Conversely, too-loose pressure causes handlebar vibration. Either condition results in an unstable motorcycle.

Checking for Steering Bearing Adjustment

To check for steering bearing adjustment, you must raise the front wheel from the floor. Place a stand under the engine or under the lower frame. Push the handlebars lightly to either side. If the handlebars continue moving with their own momentum, the steering isn't too tight. Stand in front of the motorcycle and grasp the bottom of each fork leg at the axle. Try to move the fork leg back and forth. If you can feel any fork-stem assembly movement, the stem bearings are too loose.

Adjusting Steering Tension

To adjust steering tension, turn the steering-stem head nut. Some motorcycles use a locked-cap nut that must be loosened before the head nut can be turned. Tightening the steering-stem head nut increases bearing pressure and provides harder steering. Loosen the head nut to obtain lighter steering.

Road Test 2

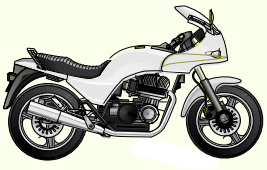

1. *True or False?* The front and rear wheels of the motorcycle must be positioned on the centerline.

2. If one side of the rear-wheel axle adjuster is adjusted more forward than the other, what problems can result from this misalignment of the rear wheel?

   _____

3. If you want to remove unwanted steering stem/fork movement, first adjust the _____ to attempt to cure the problem.

4. *True or False?* If the steering-stem bearings of the motorcycle are too loose, handlebar vibration may result.

5. The two areas of the motorcycle that you should check first if the wheels aren't aligned are the_____ and the _____.

6. The rear wheel is linked to the motorcycles frame by the _____.

Check your answers with those on page 63.

MOTORCYCLE SUSPENSION SYSTEMS

Suspension systems allow motorcycle wheels to roll over irregular road surfaces while transmitting a minimum amount of shock into the frame. The main parts of the suspension system are

- Front fork
- Rear fork (or swing arm)
- Rear shock absorbers (or rear cushion)

We'll begin by discussing the front fork. Incorporated into the front-fork assembly are the front shock absorbers. We'll discuss the rear fork and rear shock absorbers later in this study unit.

Telescopic Front-Suspension Systems

Today's motorcycles, for the most part, use a telescoping, fork-type front suspension. Some early motorcycles used spring-loaded swing arms mounted on stationary tubes to absorb bumps in the road surface.

The front-fork suspension supports the front wheel and allows it to pivot from side to side for steering by means of a triple clamp, steering head, and stem. Inside the fork tube are one or two springs held in place by a fork cap and fork-slider damping rod. The triple clamp holds the steering damper, if one is included.

Most front forks incorporate telescopic hydraulic shock absorbers to absorb the vertical shock of the front wheel when hitting bumps, thus providing a smooth ride (Figure 8). This telescopic motorcycle front-suspension system has been designed to contain a pair of upper-fork tubes containing lower-fork sliders that move into one another. Inside each of the telescopic forks is a spring and a damping-rod system.

Hydraulic damping is obtained by the transference of oil trapped between the inner- and outer-fork tubes through small holes drilled in the inner-fork tube. Some motorcycles use other valve or orifice arrangements to control the transfer of oil, restricting slider movement. Check the service manual to see what type of arrangement is being used for the particular kind of motorcycle you're working on.

The telescopic front-suspension system cushions the shock of the front wheel hitting bumps in road surfaces. As the wheel hits a bump, the sliders are pushed upward over the inner-fork tubes and compress the springs. The oil in the outer-fork tube flows through the holes or valves into the inner-fork tube. Since the transfer of oil into the inner-fork tube takes up space, trapped air is compressed and the increased air pressure increases oil-flow resistance. This has a damping effect on the shock and limits the upward movement of the outer-fork tubes. As the shock load is relieved, the springs push the slider back to the

extended position, and oil is pulled back through the holes (valves) into the vacuum created by the extension of the sliders. The flow of oil is restricted by the size of the holes or valves, and a damping effect is obtained with each movement of the sliders.

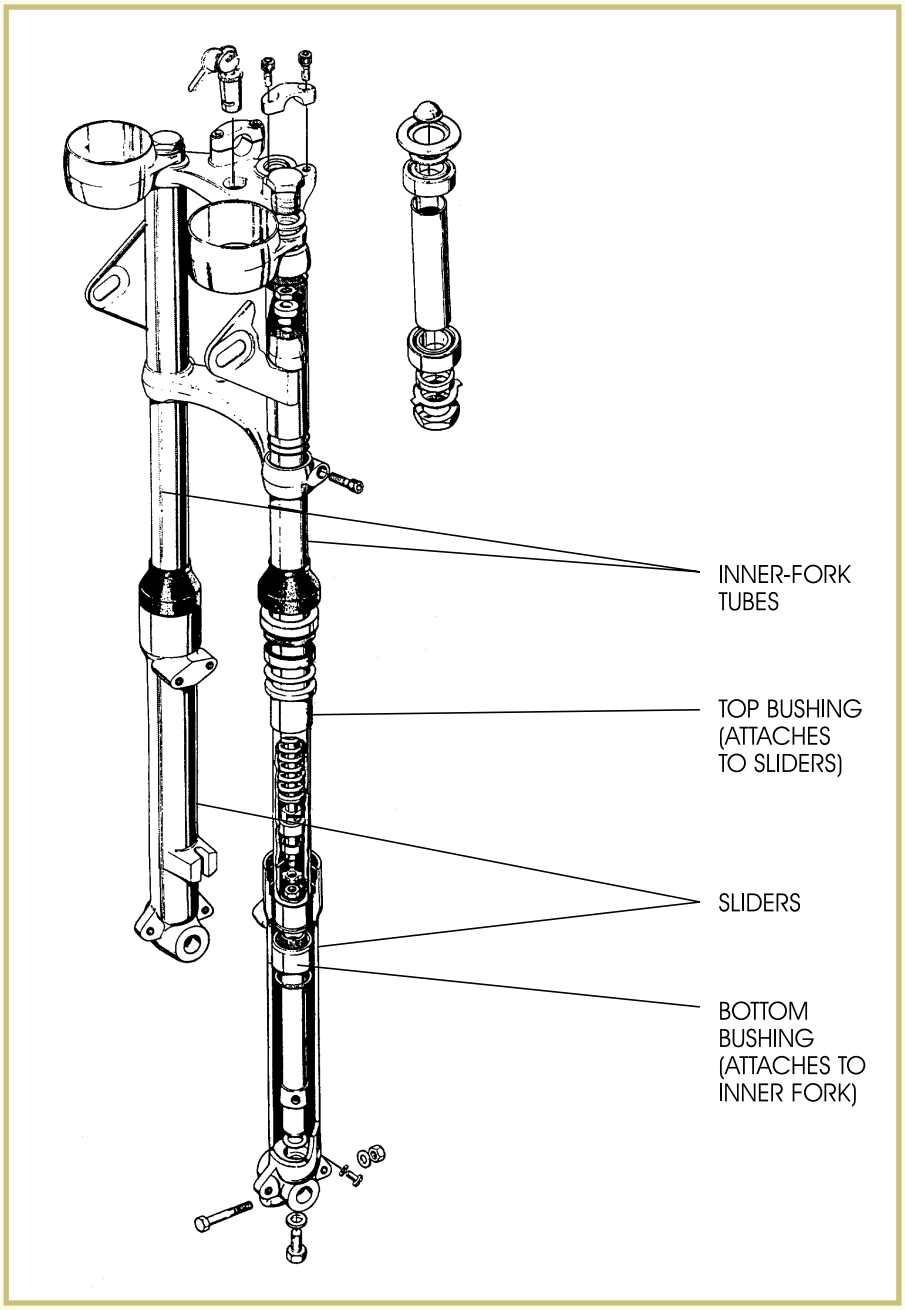

FIGURE 8—Pictured is a cutaway of a telescopic-fork assembly showing the top- and bottom-fork bushings. (Courtesy Kawasaki Motor Corp., U.S.A.)

Components

We'll now look at the individual parts of the front-suspension system, starting with the steering stem.

Steering Stem (or Lower Triple Tree)

The steering stem supports the right and left inner-fork tubes (or stanchions) by clamping around them. The stem has an axle or steering shaft in the center, mounted through bearings into the frame head. The bearings allow the stem to turn, which provides steering. Figure 9 shows a typical steering stem.

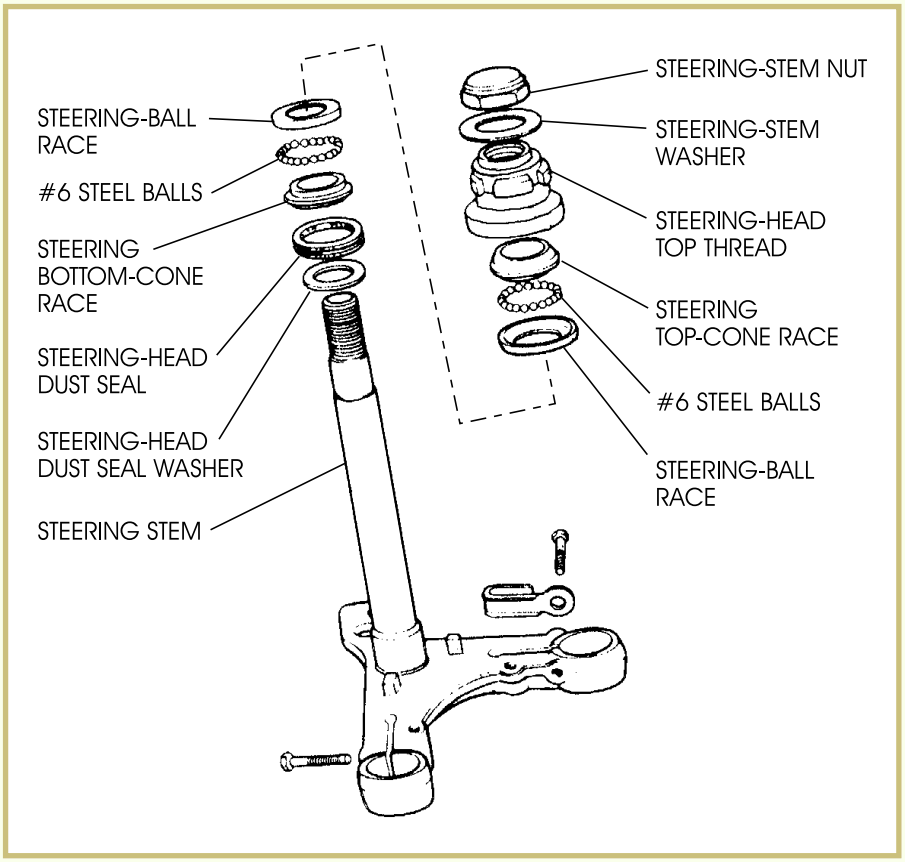

FIGURE 9—The steering column and its component parts are shown here.
(Copyright by American Honda Motor Co., Inc. and reprinted with permission)

Crown (or Top Triple-Tree Clamp)

The crown (Figure 10) attaches around the stem axle using a clamp and/or securing nut. The crown also attaches to the top of each inner-fork tube by a cap nut that provides a solid, secure attachment of the inner-fork tubes. The crown also serves as a mounting brace for the handlebars.

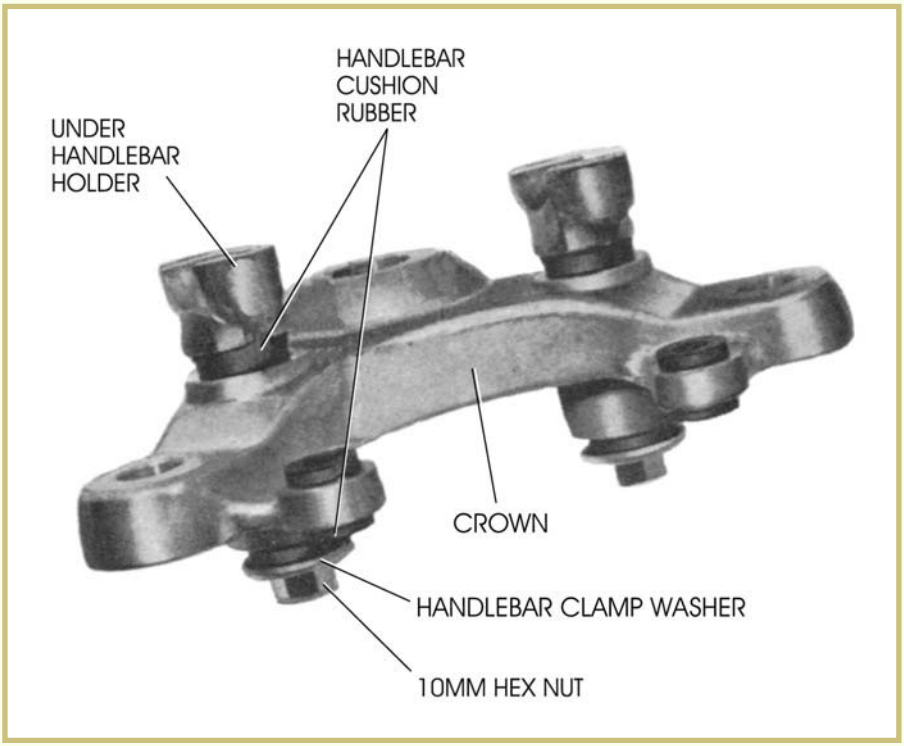

FIGURE 10—A steering crown and its component parts are shown here.
(Copyright by American Honda Motor Co., Inc. and reprinted with permission)

Inner-Fork Tubes

The outside of the inner-fork tubes is machined to provide a smooth surface for the bushing (bearing) and oil seal to slide over. The inner-fork tubes serve as a guide and mount for the outer-fork tubes. Figure 11 shows a cutaway view of a front fork.

Outer-Fork Tubes (or Sliders or Lower Fork Legs)

The outer-fork tubes (Figure 11) attach to the wheel axle and move up and down over the inner-fork tubes.

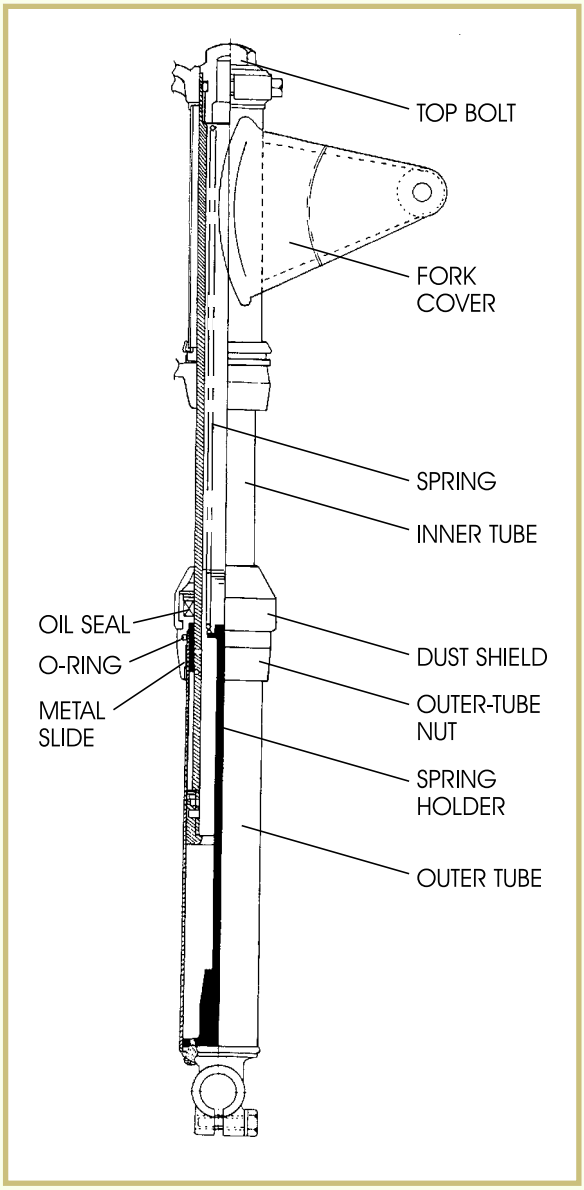

FIGURE 11—A cutaway of the inner- and outer-fork tubes is shown in this drawing. (Courtesy Kawasaki Motor Corp., U.S.A.)

Fork Bushings

Each side of the front fork has a top bushing and a bottom bushing. The top bushing fits around the inner-fork tube and into the top of the outer-fork tube. This bushing is held securely in the outer-fork tube by a retaining ring or seal-holding nut. The top bushing slides up and down with the outer-fork tube. The bottom bushing (bearing) is held securely onto the inner-fork tube by a retaining ring or nut and slides up and down inside the outer-fork tube. Figure 8 shows where the fork bushings are located.

Fork Oil Seal

The fork seal, held in the top of the outer-fork tube, must fit snugly around the inner-fork tube because its function is to prevent oil leakage. In addition, many motorcycles have dust seals to help protect the oil seals. Figure 11 shows the location of these components. While some fork oil seals can be pried out with a screwdriver, removal and replacement usually requires a special tool. Refer to the manufacturer's service manual for this information. Use care when replacing seals, as they must not be damaged during installation. Generally it's not possible to remove fork seals from their holders without damaging them; therefore, new seals must be used for reassembly.

Fork Springs

Fork springs extend the forks and allow movement of the outer-fork tubes. Fork springs fit inside the inner-fork tube and press against the tube cap nut at one end and the outer-fork tube at the other end. Again, Figure 11 shows an example of this type of spring.

Inverted-Fork Design

The inverted cartridge-fork assembly is basically an upside-down fork that has a cartridge within it that operates very similarly to a cartridge damper-fork system (Figure 12). The upper tubes in the inverted-fork design have a greater diameter than those of the standard right-side-up fork system. This larger upper tube gives this fork design more surface area, which increases the front fork's resistance to unwanted fork flexing.

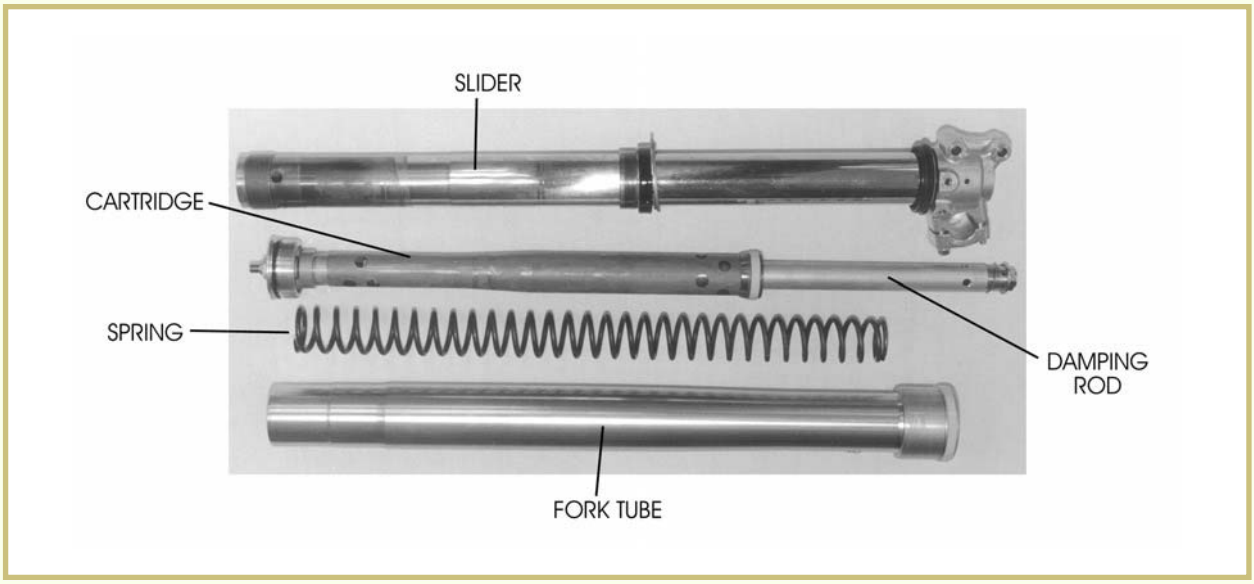

FIGURE 12—An Inverted Cartirdge Fork Assembly

Hydraulic Damping Units

Various systems hold hydraulic damping units in place. Two examples of typical systems follow.

Standard damping-rod fork design. Figure 13 shows a cutaway of a standard damping-rod fork. As the outer tube moves upward on the compression stroke, oil in chamber B flows through an orifice in the fork tube into chamber C, while the oil remaining in chamber B pushes past the free valve into chamber A. The resistance in the fork created by the oil flow is designed to absorb shock on the compression stroke of the fork. As the fork gets close to full compression, a tapered oil-lock piece hydraulically locks the fork before it has metal-to-metal contact with any portion of the fork.

On the fork rebound stroke, the oil in chamber A flows through an orifice in the top of the damping rod into chamber C. The result is resistance that serves as a damping force to control the spring from rebounding too quickly.

Cartridge fork design. This fork design includes a hollow piston and rod that fit into the existing damping rod inside the lower-fork leg to form a cartridge. Most of the oil in the fork stays within the cartridge, which maximizes the fork's damping effectiveness. In most cases, there's an adjuster located at the bottom of the fork slider that allows the operator or technician to change the oil flow, making the suspension softer or stiffer, thereby providing more accurate compression damping. Figure 14 shows a cartridge-fork design.

FIGURE 13—A damping-rod fork cutaway is shown here. (Copyright by American Honda Motor Co., Inc. and reprinted with permission)

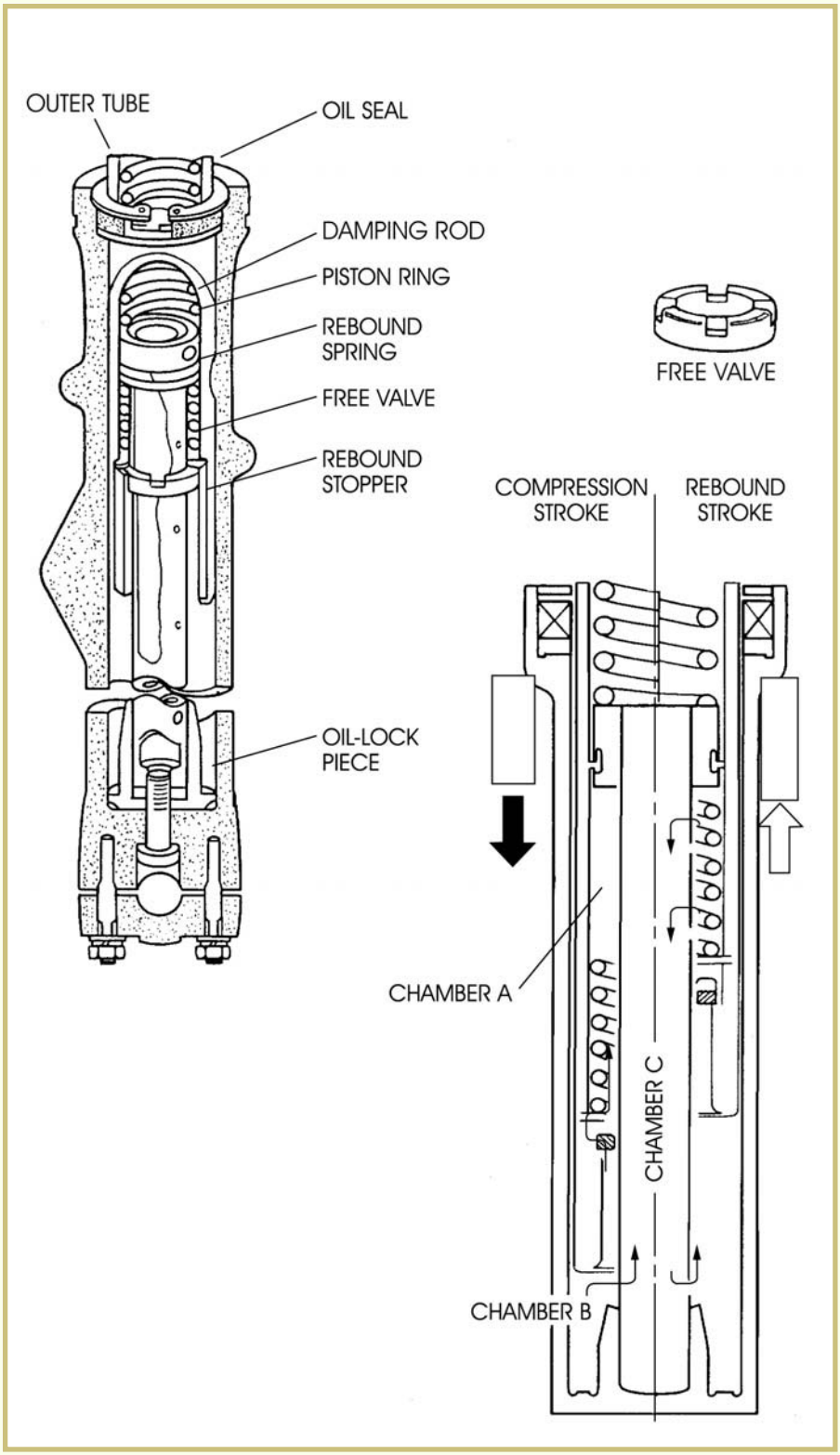

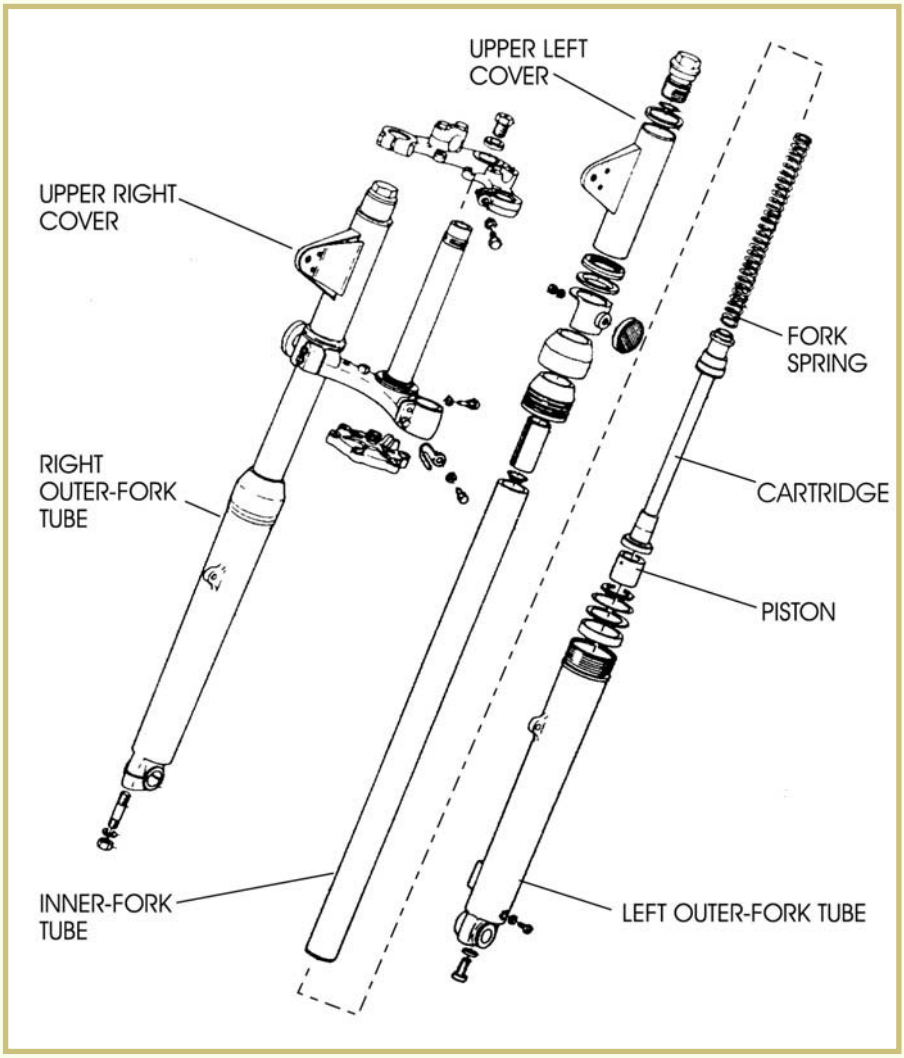

FIGURE 14—An exploded view of a cartridge fork is shown here. (Copyright by American Honda Motor Co., Inc. and reprinted with permission)

Other Fork Designs

Trailing link. This system uses a link to mount the front wheel to the rear of the front tubes. The drawback to this system is that it doesn't cushion the braking load efficiently. Figure 15 shows this system.

Leading link. This system uses a link to mount the wheel to the front of the tubes (Figure 16). This system works well, but it's very expensive to manufacture.

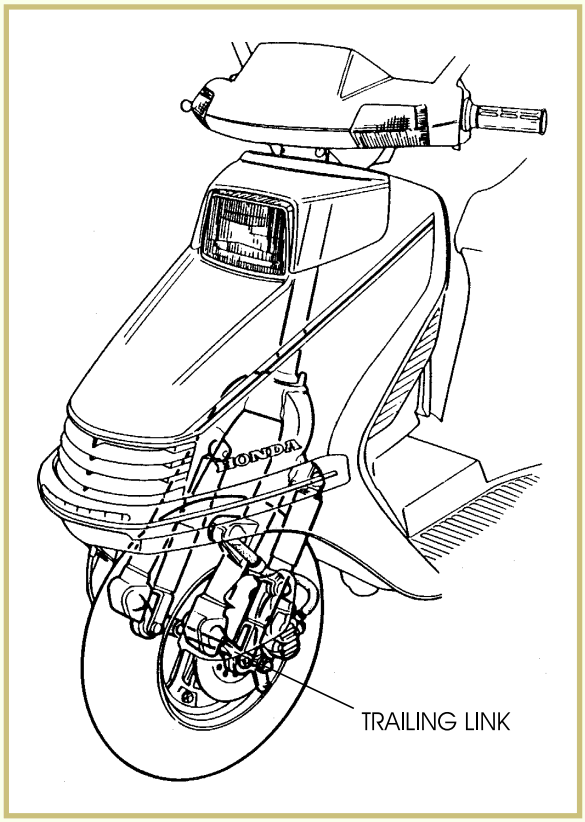

FIGURE 15—A Trailing-Link Front-Suspension System. The axle is at the rear of the link.
(Copyright by American Honda Motor Co., Inc. and reprinted with permission)

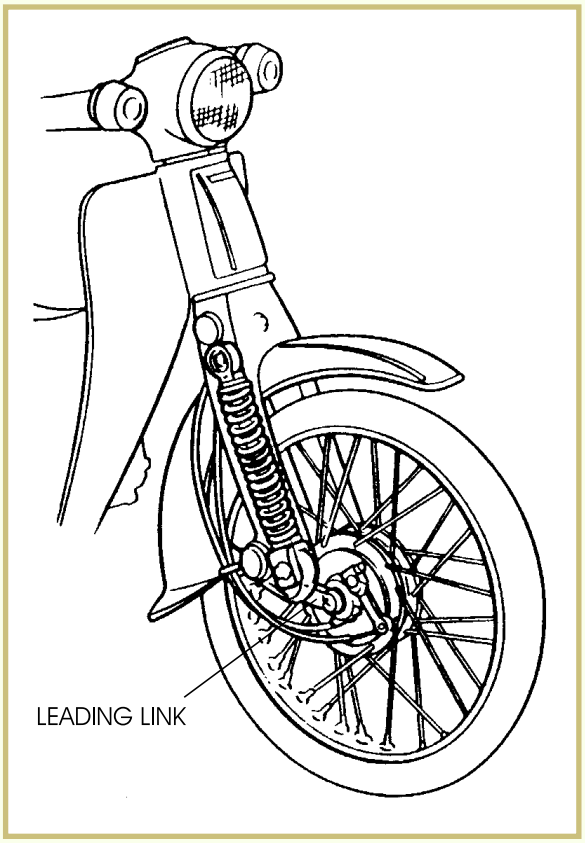

FIGURE 16—A Leading-Link Front-Suspension System. The axle is at the front of the link.
(Copyright by American Honda Motor Co., Inc. and reprinted with permission)

Springer. The springer fork assembly (Figure 17) was an outdated system until it was redesigned by an American motorcycle manufacturer. This system uses a rigid fork, which is attached to and pivots in the frame's steering-head bearing area. There's also a spring fork that slides through the rigid-fork bushings. This unit is attached to the rigid fork by two rockers. These rockers pivot on self-lubricating bushings. The suspension in this design is provided by six compression springs and two rebound springs. Figure 18 shows the newer version of the springer front-end suspension that uses a single hydraulic shock for suspension damping.

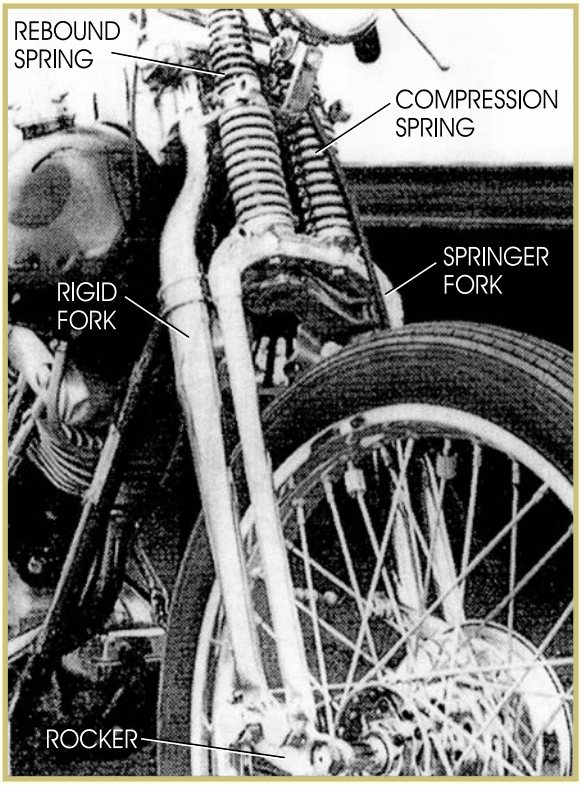

FIGURE 17—A non-hydraulic springer front fork is shown here.

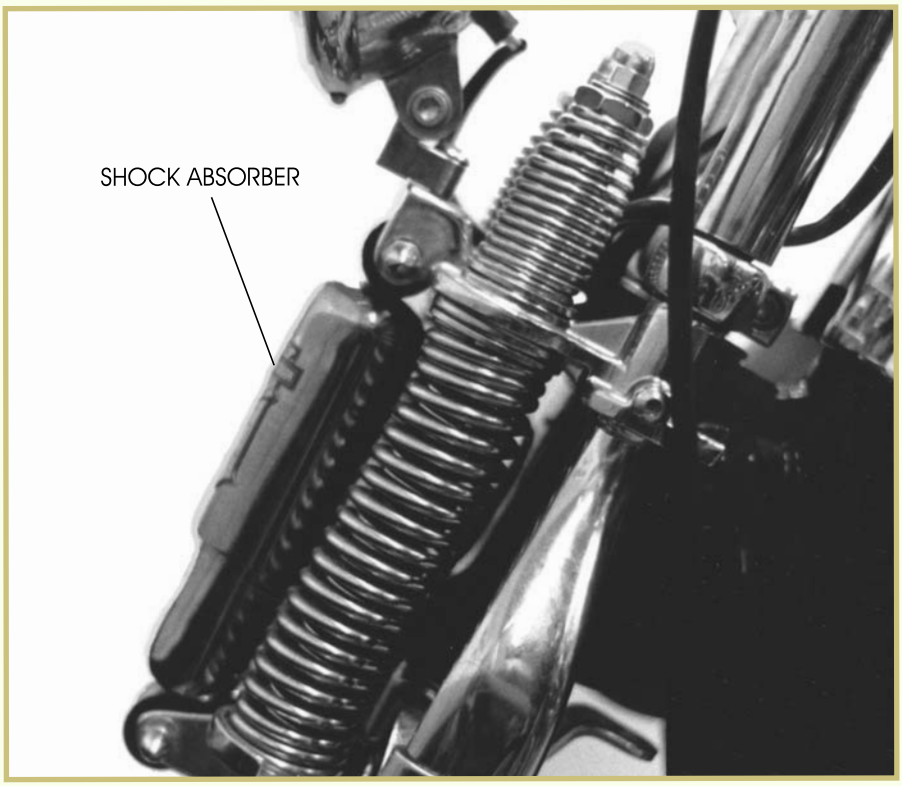

FIGURE 18—Shown here is a newer springer suspension system with a hydraulic damper in front of the springs.

Road Test 3

1. The _____ front-fork system is the most commonly used system on motorcycles.

2. Hydraulic damping in a telescopic suspension system is obtained by the transference of _____ trapped between the inner- and outer-fork tubes through small holes drilled in the inner-fork tube.

3. The _____ is the component that supports the right and left inner-fork tubes by clamping around them.

4. _____ and _____ are two names that are used to identify outer-fork tubes.

5. The _____ is the component located in the top of the outer-fork tube that's used to prevent oil leakage.

Check your answers with those on page 63.

INSPECTING AND SERVICING FRONT FORKS

Front-fork assembly repair and service is one job you'll encounter often when working as a motorcycle technician. Although these assemblies are designed for long use with minimum maintenance service, forks often need to be repaired or replaced.

Oil leaks. Normally front forks don't require service unless the oil has become contaminated or is leaking. Replace the seal when you see oil leaking. Other evidence of oil leaks is a heavy knock when the fork is fully depressed rapidly. The slider hitting the bottom of the stanchion causes this noise.

The rapid return of the sliders to their fully extended position after being fully depressed is another indication that the forks need service. This usually produces a knocking noise which indicates the quantity of oil isn't correct.

Contaminated oil. Although the oil is sealed in the forks and shouldn't escape, the continued use of the fork system contaminates the oil. Oil that's contaminated appears emulsified, aerated, or light brown in color and should be replaced because it can cause wear of internal parts.

Changing Fork Oil

The following steps will help you learn how to change the front-fork oil:

1. Remove the drain plugs with a wrench (Figure 19). This allows the contaminated oil to escape.
2. Remove the fork-tube cap nut at the top of the fork tube (Figure 20).
3. Work the fork assembly up and down until all the oil has drained from both fork legs.
4. Replace the drain plug.
5. Refill each side with the correct amount and viscosity of oil.
6. Replace the top cap nut.

Refer to your service manual for the correct amount and viscosity of oil. Changing the viscosity and the amount of oil allows a softer or harder ride, as desired. A lighter-viscosity oil (2.5-weight, for example) flows through the valves faster, allowing the forks to depress more rapidly and produce a softer ride. Heavy oil, such as 10-, 15-, or 20-weight, produces stiffer fork action and a harder ride. In this way, you can adjust the overall hydraulic-damping action to your preference.

FIGURE 19—Drain plugs can be removed from the fork using a wrench.

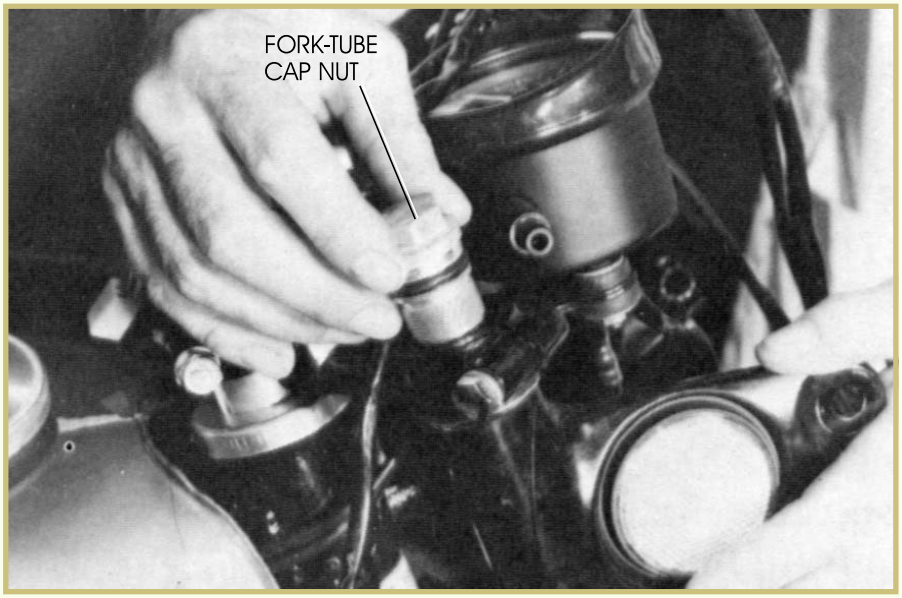

FIGURE 20—A technician is removing the fork-tube cap nut.

Replacing the Fork Seal

You must disassemble the front fork to replace a leaking oil seal. To remove the front wheel, remove the axle-securing nut or nuts. Different systems of securing the front axle are used on different types of motorcycles. Figures 21 and 22 show one common method of securing the front axle. In this system, a nut on the outside of the slider holds the axle. After the securing nut has been removed, the axle can easily be pulled from the wheel.

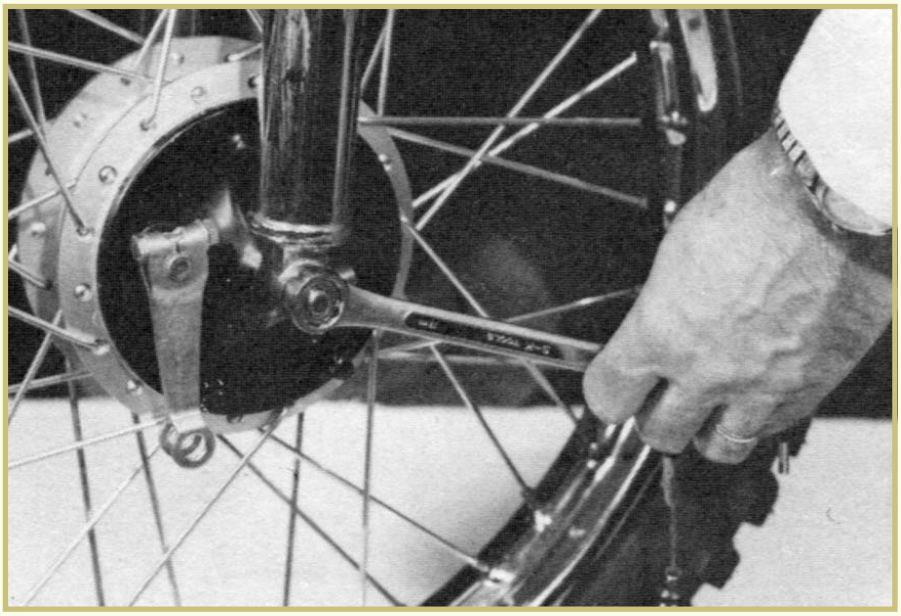

FIGURE 21—One common method of attaching the front axle to the fork is shown here.

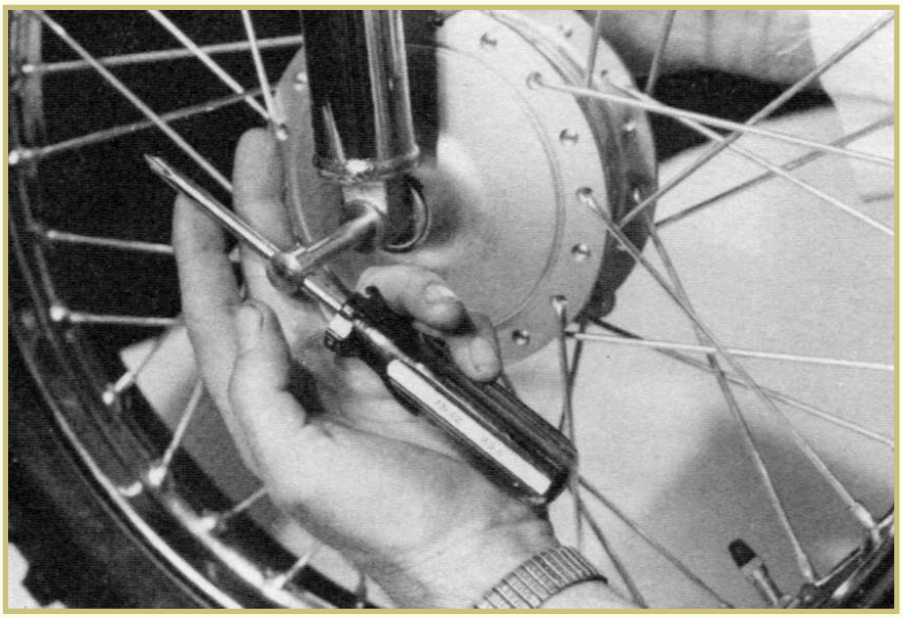

FIGURE 22—The front axle slides out of the fork after the axle nut has been removed.

In the system shown in Figure 23, caps on the end of the sliders hold the axle and are removed to release the axle. This system doesn't require the axle to be removed from the wheel except to service the brakes or wheel bearings. Instead, the entire wheel assembly, including the axle, is removed when you want to work on the front fork.

Remove the front fender or fork braces which may be attached to both fork sliders. At this point, you'll have each slider free of the other, and each can be worked up and down independently. Remove the fork-tube cap nut (Figure 20) and the bolt securing the fork tube into the fork stem (Figure 24).

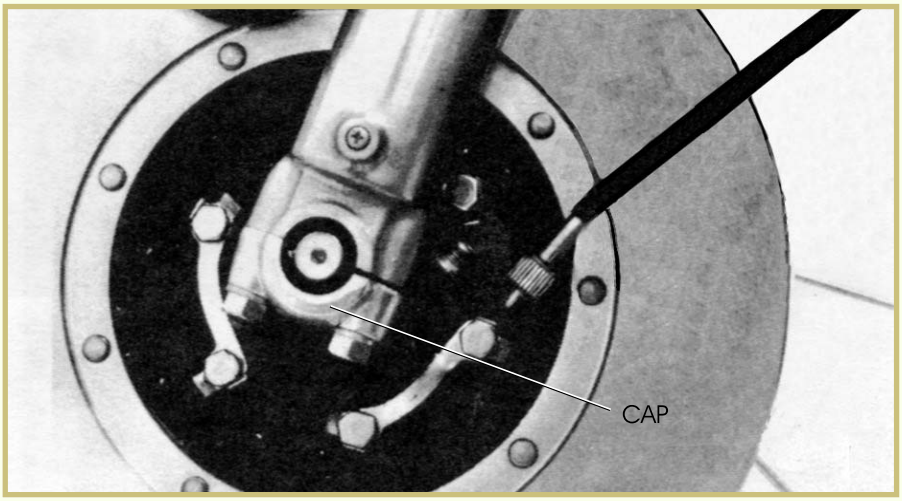

FIGURE 23—Two attaching nuts and a cap apparatus hold the axle in place.

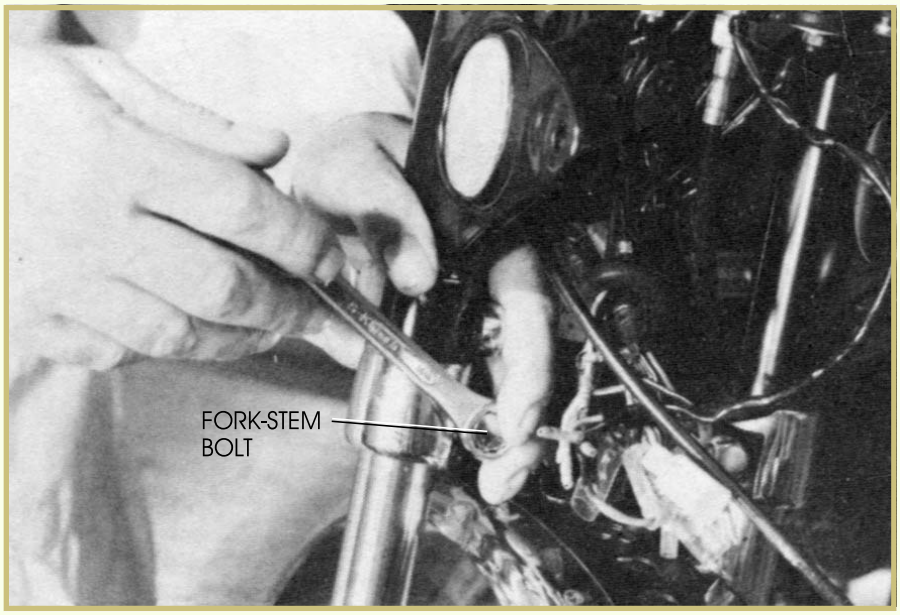

FIGURE 24—The lower fork-stem attaching fastener is being removed here.

At this point, you may be able to pull the fork tube free of the stem. Figure 25 shows the fork tube. If you aren't able to remove the fork tube, obtain the factory tool designed for this purpose. This tool is normally a long, threaded rod that has the same thread as the cap nut on one end. The cap-nut-threaded end of the tool screws into the fork tube and is used to force the tube free of the stem clamp. This tool is also used to pull the fork tube into place when you reassemble the fork.

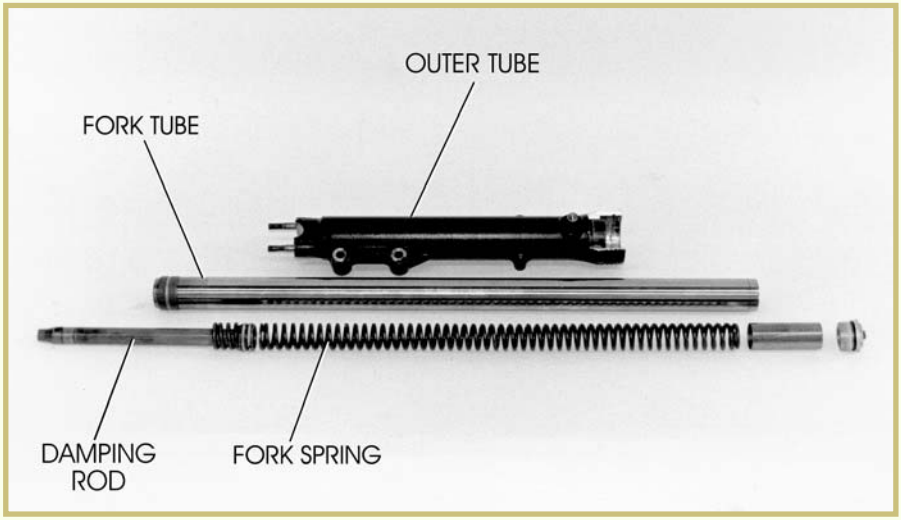

FIGURE 25—The fork tube has been removed from the steering stem.

Remove the fork oil-seal holder to separate the fork tube and the slider. Again, different systems are used to secure the seal. Use the service manual for the particular motorcycle to help you determine what system is used on your model. Two types of oil-seal holders are described below.

Threaded fork slider. In this system, used on older motorcycles, the threads may be inside or outside of the fork slider or seal holder. Removal requires a special tool, as shown in your shop manual.

Snap ring. This system of holding the fork oil seal consists of a snap ring that fits into a groove in the slider and is removed by snap-ring pliers as shown in Figure 26.

Straightening Bent Fork Tubes

At this point in your process of repairing and servicing the front forks, you should check to be sure that each fork tube is straight. To determine whether or not the fork tubes are straight, use a dial indicator and special blocks to allow the fork tube to be rotated (Figure 27).

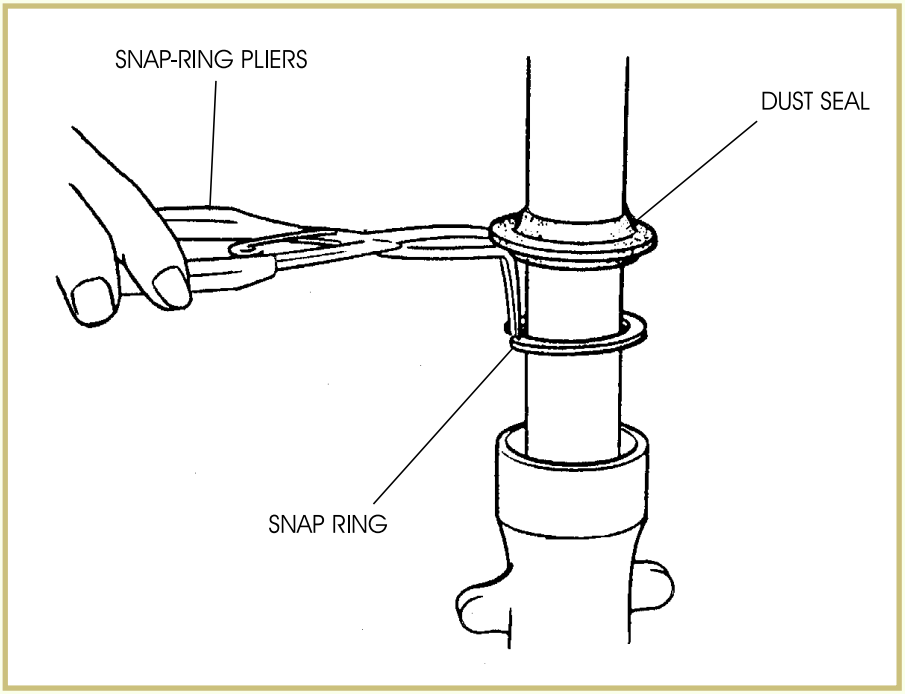

FIGURE 26—This illustration shows the removal of a snap ring which is holding the fork seal in place. (Copyright by American Honda Motor Co., Inc. and reprinted with permission)

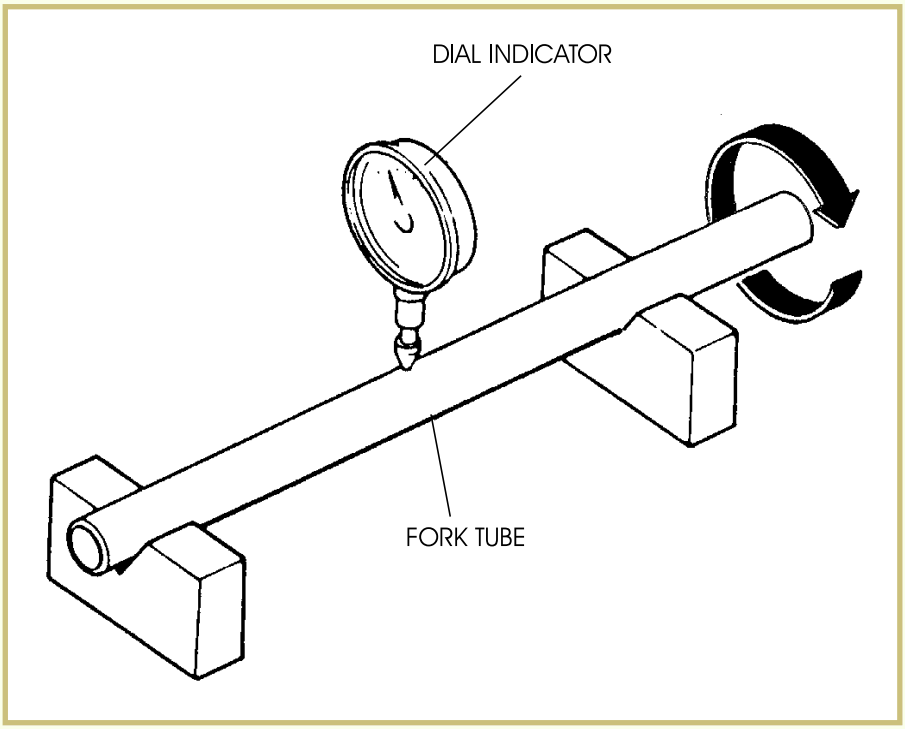

FIGURE 27—Shown is the technique of measuring the fork tube runout by rotating the fork tube with a dial indicator mounted against it. (Copyright by American Honda Motor Co., Inc. and reprinted with permission)

Straightening the fork tubes requires several special tools: a hydraulic or screw-type press, a dial indicator, and straightening blocks. The straightening process, although not recommended by manufacturers, can be accomplished as follows:

1. Secure the special V-blocks so they can't move. Place the fork tube on the V-blocks with the dial indicator in contact with the fork tube.
2. Rotate the fork tube until you have located the high point, and mark it with chalk.
3. Place the fork tube in the press so that the high place of the tube can be forced down. (Use an aluminum saddle to protect the tube from the press, or the tube will become dimpled and rendered unusable.)

Repeat this process until the tube is straight.

If the reading on the dial indicator shows a bend of between 0.001 in. and 0.002 in. in the fork tube, it's usually considered straight and can be reinstalled into the slider. Be sure the slider will slide up and down freely over the fork tube.

When the front forks have been severely damaged in a wreck, you'll normally have to replace the fork tubes, stem, bearings, and bearing races. Fork tubes that show signs of severe bending (stretched or kinked metal) shouldn't be straightened. In this case, you should use new tubes.

Replacing the Steering Stem, Bearings, and Races

Fork stems that are bent and can't be straightened should be replaced because they determine wheel alignment and are unsafe if severe bending has weakened the metal. Bearings and races often flatten if they're damaged in a wreck (front-end collision), which causes rough steering.

To replace the stem and bearings, remove the stem-holding nut and top clamp. The stem can then be pulled down and out.

To replace the bearings and races, lift off the inner race, exposing the bearings, which will fall out; then tap the outer race from the frame head with a hammer and drift, and tap the new outer race back in. Grease and replace the bearings; put in a new inner race; then replace the stem, securing nut, and top crown. Some models use the loose ball-bearing design above, but some models use tapered bearings. The procedure to replace the tapered bearings is the same as that for the loose ball-bearing systems.

Road Test 4

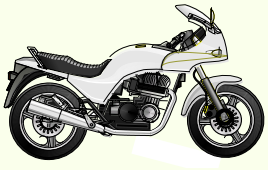

1. A fork can have a bend of between _____ to _____ inches to be considered useable and not need to be replaced.

2. A _____ and a _____ are two special tools that are used to check a fork tube for straightness.

3. Name the parts that will usually have to be replaced if the forks are damaged in a front-end collision.

   _____

4. Explain why a damaged fork stem should be replaced.

   _____

5. Can you vary the amount of oil in the front fork tubes?

   _____

6. How would changing the weight of the oil affect motorcycle ride?

   _____

Check your answers with those on page 63.

MOTORCYCLE REAR SUSPENSION

Swing-Arm Assembly

The swing arm is mounted to the frame by a pivot shaft (or pivot bolt) which prevents side-to-side movement while at the same time allowing up-and-down movement of the open end (Figure 28). The swing arm works with the rear damper units (shock absorbers) to provide a smooth ride.

The swing arm serves as the mounting bracket for the rear-wheel assembly and the rear shock absorbers. The rear shock absorbers (or rear cushion) on most motorcycles aren't rebuildable. However, some shock absorbers sold as replacement units can be rebuilt, but even they require a specialist. Replace rather than repair excessively worn or damaged shock absorbers.

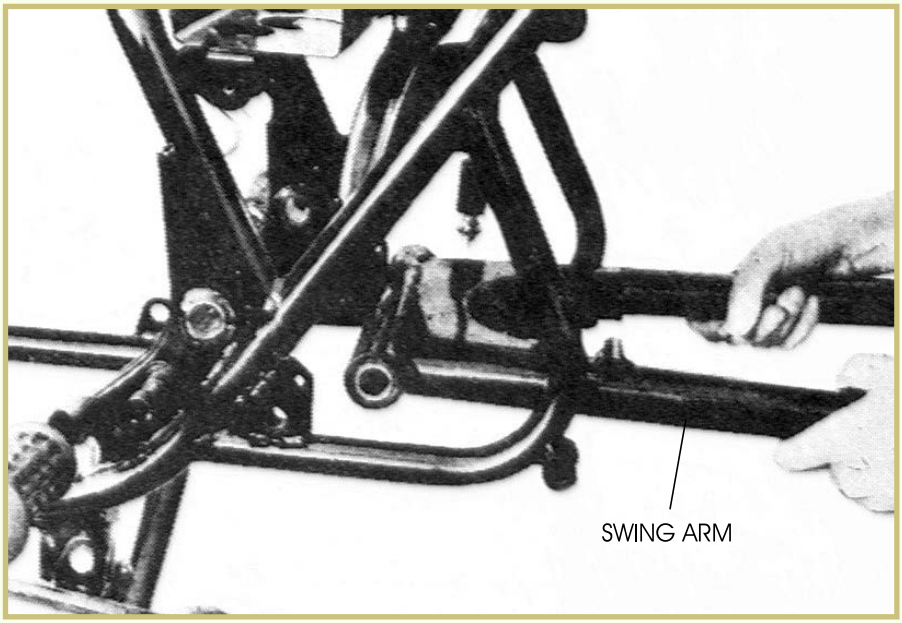

FIGURE 28—A swing arm is shown here. (Courtesy Kawasaki Motor Corp., U.S.A.)

Repairing the Swing Arm

Swing-arm repair usually consists of replacing the pivot bushing or bearing. Replace the swing arm by removing the rear wheel, rear shocks, and pivot shaft. Remove the swing arm from the frame and install new bushings or bearings.

Because repairing a bent swing arm is a major factor in wheel alignment and requires special straightening tools, this repair is best performed by a specialist. It's also more economical to replace rather than repair a damaged swing arm.

Replacing the Bearings

Replacing bearings usually requires using a hydraulic press to push the old bearing out and the new bearing in. Figure 29 shows the swing arm and mounting bearings on another type of street bike using different swing-arm bushings.

In some cases, you can use a hammer and drift to remove the old bearing (Figure 30). Insert the drift through the bushing on one side at an angle. Locate the drift end against the bearing on the opposite side and move it around the edge of the bearing a little with each blow of the hammer, thus tapping the bearing out evenly.

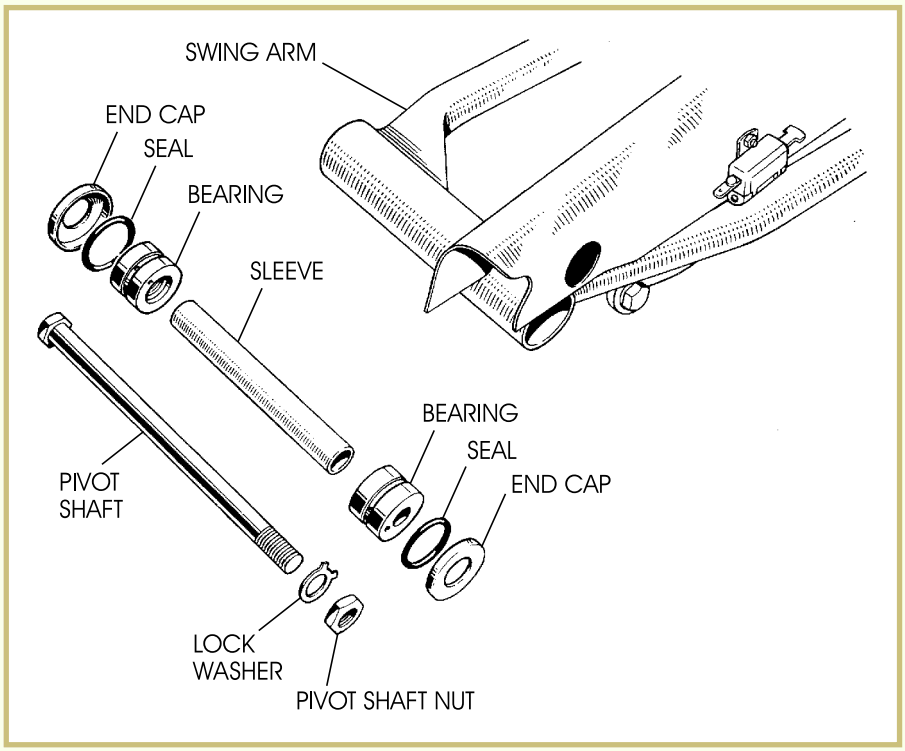

FIGURE 29—The swing-arm pivot bolt and all the bearings for a typical swing arm are shown here. (Drawing courtesy Triumph)

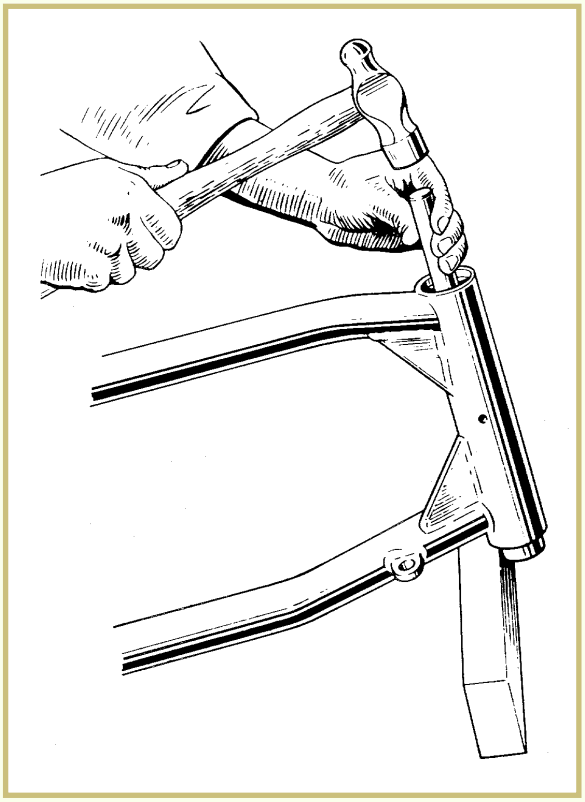

FIGURE 30—Old swing-arm bearings are often removed with a hammer and a drift. (Drawing courtesy Triumph)

New bearings are pressed into the housing with a press. Use care to be sure the bearing starts squarely into the housing. Misalignment causes a burr on the bearing or possibly damages the housing.

Repairing a Bent Swing Arm

Straightening a bent swing arm that has been dented at the point of the bend isn't recommended. The safest and quickest repair is generally replacement. However, you can use the following procedure to check the alignment of the rear fork.

1. Secure the motorcycle on a stand in a level, upright position.
2. Measure the distance from the floor to each side of the rear-fork bearing housing where it mounts to the frame to be certain the motorcycle is level. The distance should be equal on each side if the motorcycle is level with the floor.
3. Remove the rear wheel and disconnect the rear shocks.
4. Place the axle in the axle mount and brace the swing arm in its normal position by placing a block under the bolt. Because the shocks are disconnected, the swing arm will fall to the floor without a brace.
5. Measure the distance between the floor and each side of the arm at the bottom of the axle-mounting hole. The distance should be equal on each side, indicating that the two sides of the swing arm are parallel and the swing arm isn't bent.
6. If one side is lower, place a bar under the low side and over the high side. Then apply pressure to the bar in order to bend the high side down, thus aligning both sides so they're equidistant from the floor. If the swing arm has been removed from the frame, check alignment as shown in Figure 31.

Removing and Replacing the Swing Arm

Removing and replacing the swing arm is generally a straightforward job. A long bolt (spindle) with a nut holds the swing arm in the frame. Removal of the rear wheel, brake arm, and chain, along with rear engine mounts or other parts that may interfere with extracting the long bolt, is normally all that's required. In some cases, this bolt and swing arm can be extracted without removing any parts except the rear-wheel components, shocks, etc.

Replacing the swing arm on the frame is a reversal of the removal process. Place the spindle (long bolt) through the mounts and swing-arm bearings and secure with a nut before installing the other parts (shocks, rear wheel, etc.).

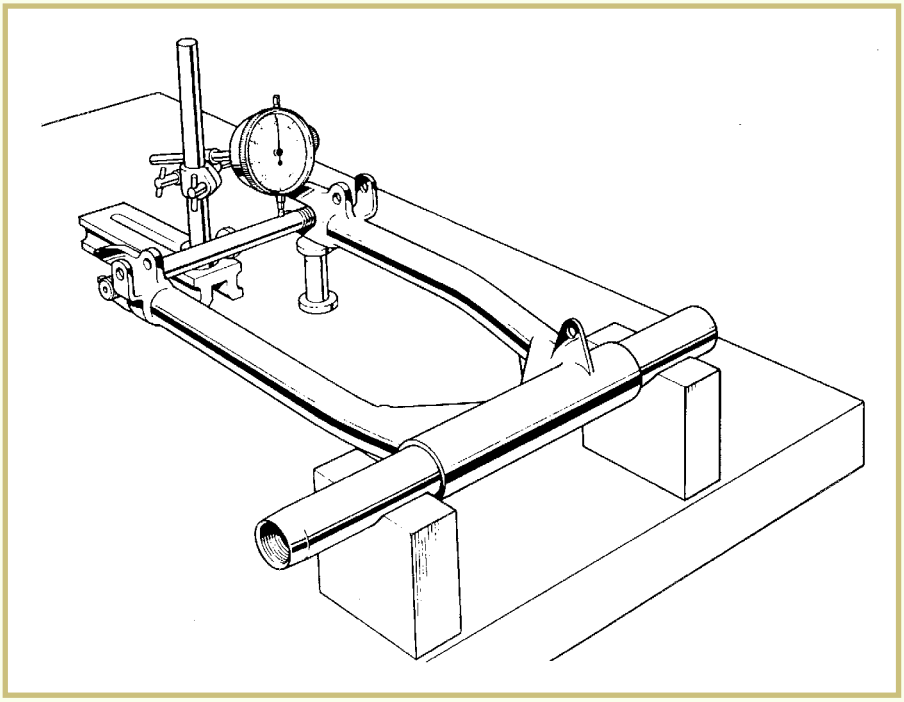

FIGURE 31—Swing-arm alignment is being checked here. (Drawing courtesy Triumph)

Rear-Damper Designs

As we mentioned before, rear shock absorbers are usually replaced all in one unit. However, you should know how they operate and also how to check the condition of these shocks.

The most popular rear dampers (or shocks) on motorcycles today are the *deCarbon* shock design. This shock uses nitrogen gas in a separate chamber to keep the oil in the shock from foaming. Foaming causes the shock to lose its damping qualities.

A remote-reservoir deCarbon shock absorber is pictured in Figure 32. This type of shock allows an increase in oil capacity and allows the reservoir to be mounted on the frame separately.

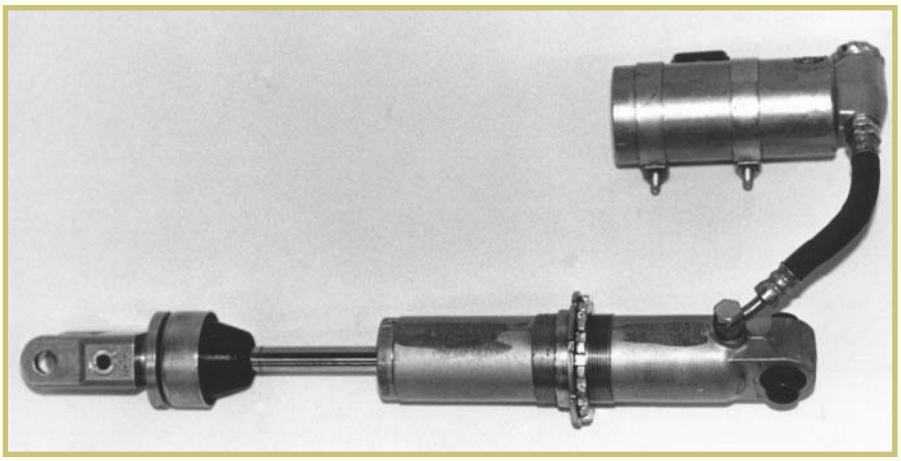

FIGURE 32—A remote-reservoir rear deCarbon shock with the spring removed is shown here. (Image courtesy of Yamaha Motor Corporation, U.S.A.)

A piggyback deCarbon shock absorber is pictured in Figure 33. This shock has the same internal design as the remote-reservoir shock but has its reservoir mounted solidly onto the shock body.

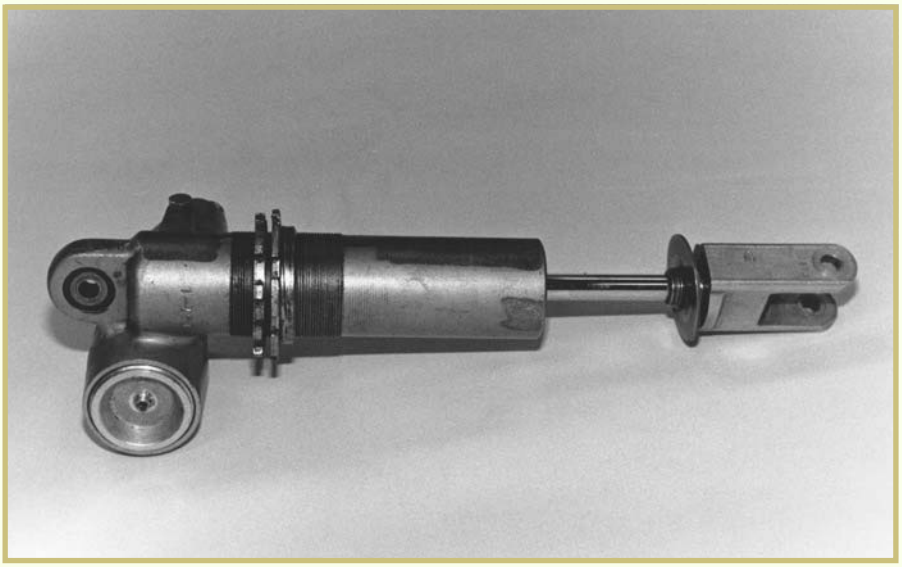

FIGURE 33—A piggyback rear deCarbon shock with the spring removed is shown here.

The oil in the deCarbon shock is normally controlled by spring washers that are forced to move when the oil pushes them open as the shock is compressed. Figure 34 shows the shock piston rod after it has been disassembled. Figure 35 shows a close-up view of the piston rod to allow us to view the shims on the bottom of the rod. These shims move, allowing the oil to flow through the shock. Figure 36 shows the shock further disassembled so we can see the shims as they're removed in order. Damping characteristics can be changed by moving these shims into different positions. This type of work is recommended for experienced shock-absorber professionals only!

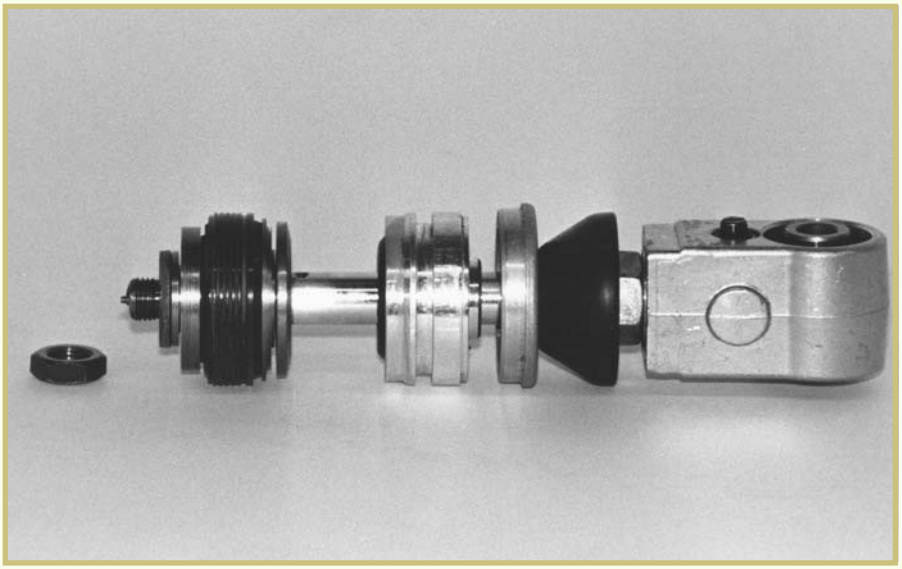

FIGURE 34—A typical shock piston rod is shown here. Note the nut which holds the components together.

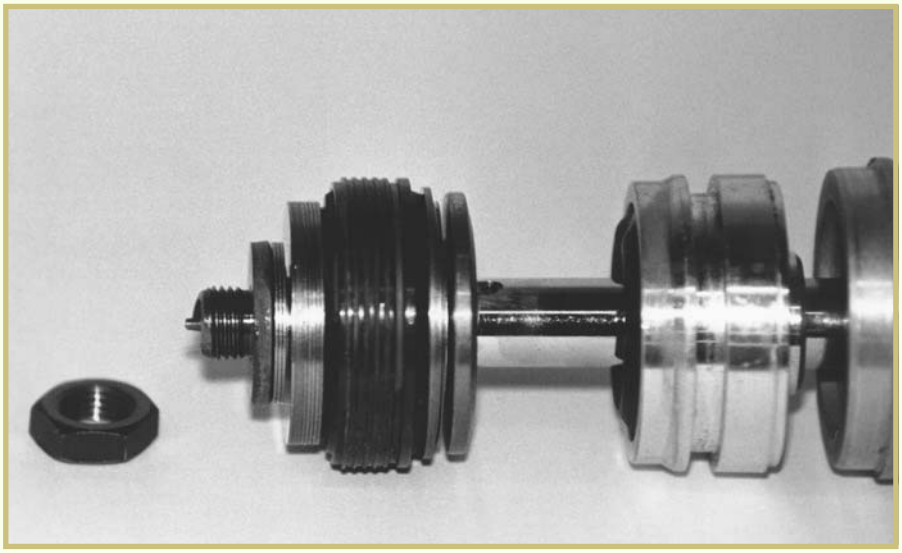

FIGURE 35—Here is a close-up view of the shock piston rod.

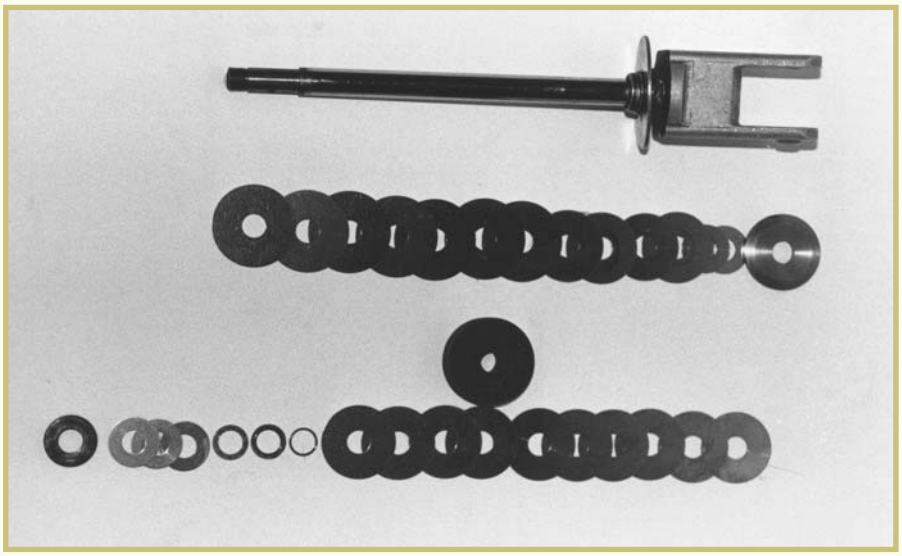

FIGURE 36—Pictured is a fully disassembled rear shock piston rod.

To do a simple check of the condition of a rear deCarbon shock, remove it from the motorcycle and compress each shock absorber. If the shock absorber, when released, returns halfway to the original position quickly and then slowly the rest of the way, it's in good condition. If it returns quickly all the way to its original position, the shock absorber probably needs to be replaced.

Motorcycle Rear-Suspension Systems

Motorcycle suspension-system technology, especially in rear suspensions (single-shock models in particular), has advanced considerably over the past decade. Twin-shock rear suspensions are still widely used, but single-shock models have become the industry standard. Motorcycle technicians should understand how they work.

There are five basic types of modern motorcycle single-shock rear-suspension systems:

- Monocross (Yamaha)
- Uni-Trak (Kawasaki)
- Pro-Link (Honda)
- Full-Floater (Suzuki)
- Paralever (BMW)

You should know that all five of these systems operate on the principle of *rising rate.* When a rider drives over small bumps and at low speeds, the first third of the rear suspension travel is engineered to ensure a smooth, comfortable ride. Then, as the rider hits larger bumps or the speed of the bike increases, the suspension becomes progressively stiffer to resist bottoming. This is known as *rising rate suspension.* Let's look at the five single-shock systems now in more detail.

Monocross rear suspension (Yamaha). This system design makes it possible for the shock absorber to be fitted at a lower position and closer to the center of gravity. The rising-rate effect in this system ensures better traction without sacrificing rider comfort. Figure 37 illustrates the Monocross rear-suspension system.

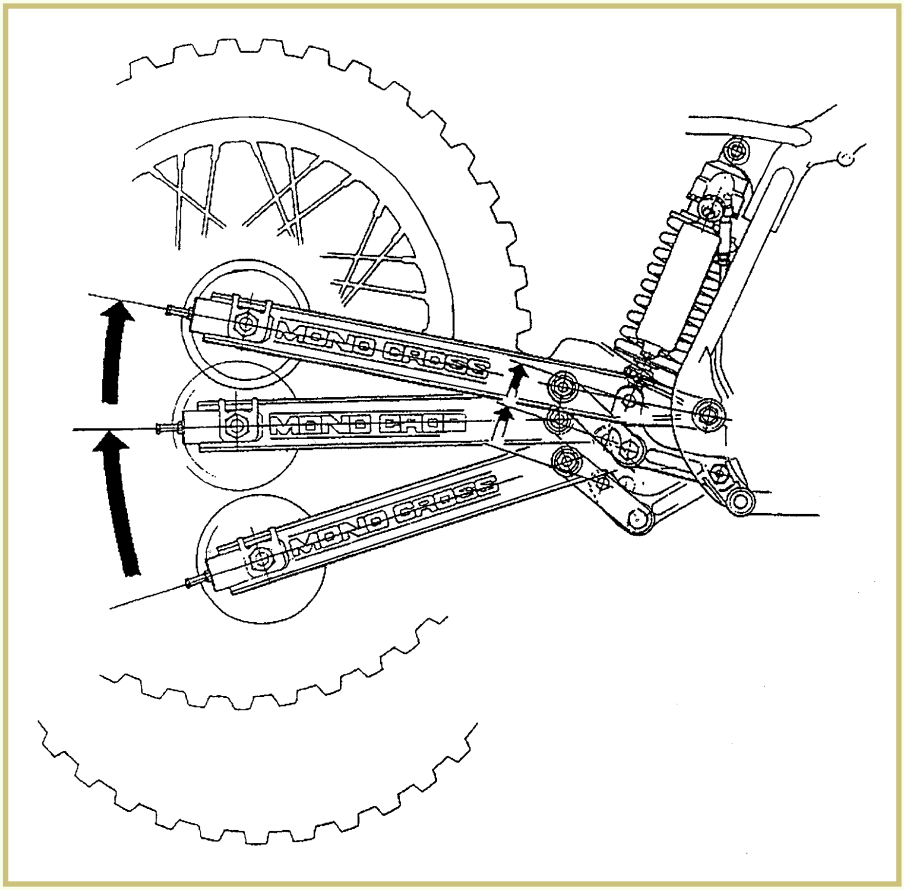

FIGURE 37—A Yamaha Monocross rear-suspension system is shown here. (Image courtesy of Yamaha Motor Corporation, U.S.A.)

Uni-Trak suspension (Kawasaki). This system is designed to transfer the movement of the motorcycle's rear wheel and swing arm to a specially-designed link arm which in turn acts upon one large shock absorber and spring assembly. This shock-absorber assembly is located low and in the center of the rear end of the frame. This design improves weight centralization by lowering the motorcycle center of gravity. As the suspension is compressed, the design of the shock's linkage increases the shock's damping and spring rate progressively. This means that when the motorcycle hits big holes, the rider gets a lot of shock damping; and when the motorcycle hits small holes, the rider gets very light shock damping. Figure 38 illustrates the Uni-Trak rear-suspension system.

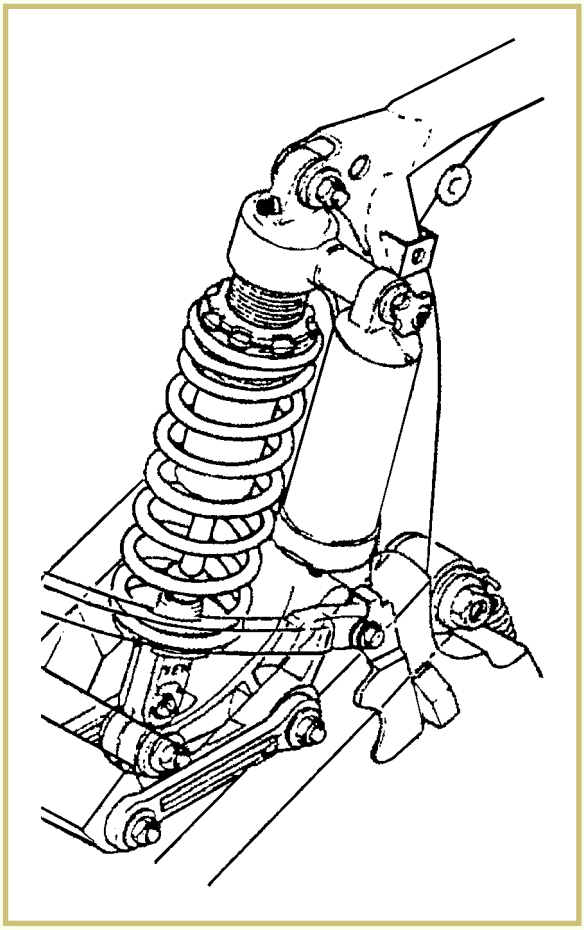

FIGURE 38—A Kawasaki Uni-Trak suspension is shown here. (Courtesy Kawasaki Motor Corp., U.S.A.)

Pro-Link suspension (Honda). The Pro-Link rear-suspension system is designed to give the rear-suspension system a rising rate as the swing-arm movement reaches its full compression. The linkage design of this system acts like a fulcrum on a teeter-totter in your local playground. The fulcrum moves forward and backward as the swing arm swings from full extension to full compression. At full extension, the fulcrum is near the swing-arm pivot, which in turn gives the rear wheel a lot of leverage over the shock. The ride is very smooth over

small bumps or at low speed. When the suspension system nears full compression, the fulcrum at this point moves towards the rear wheel, giving the shock much more leverage over the rear wheel and increasing the amount the shock moves relative to the rear-wheel travel. Here the ride is very stiff to prevent bottoming on large bumps or at high speeds. Figure 39 shows the Pro-Link suspension system.

FIGURE 39—A Honda Pro-Link suspension system is shown here. (Copyright by American Honda Motor Co., Inc. and reprinted with permission)

Full-Floater rear suspension (Suzuki). The Full-Floater single-shock rear-suspension system uses a link-rod and a bell-crank system to change the shock's lever ratio according to how much the shock suspension stroke is. This means that when the wheel travel increases, the suspension becomes stiffer. The bell-crank part of the suspension system is connected at one end to the lower part of the frame and the other end of the bell crank is connected to the shock absorber. Rods extend from the center of the bell crank that are connected to the swing arm. There are needle-roller bearings at each linkage connection. These needle-roller bearings improve suspension response needs. Figure 40 illustrates the Full-Floater rear-suspension system.

Paralever (BMW). In this system, the swing arm incorporates two universal joints. One universal joint is located at the swing arm where it conventionally couples to the transmission. The second universal joint is located where the drive shaft joins the rear wheel's final-drive gear case. (The universal joints must be arranged in such a way as to eliminate the shaft-drive effect from the chassis.) Under acceleration, the final drive's pinion gear tries to climb up the ring gear and thus extends the rear suspension. The forces transmitted in the final drive are magnified proportional to the rear suspension's travel. Adding a second universal joint frees the ring-and-pinion assembly from the swing arm. Instead of an on-off throttle creating a typical up-down shaft response, the Paralever system has a front-to-back twisting which the shock easily damps with no change in the motorcycle's wheel base or rear-wheel travel. Figure 41 shows the Paralever suspension system.

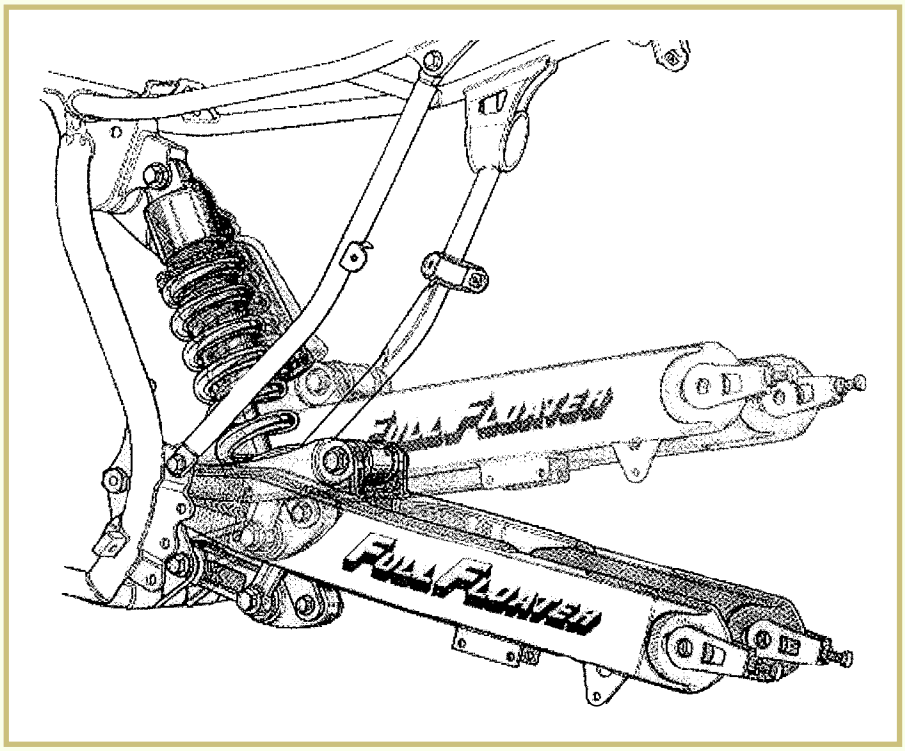

FIGURE 40—The Suzuki Full-Floater rear-suspension system is shown here.
(Courtesy of American Suzuki Motor Corporation)

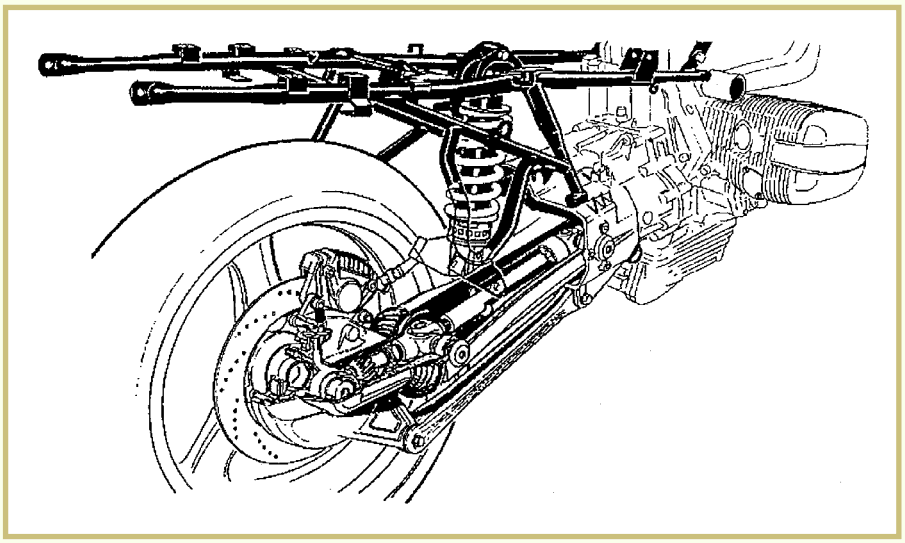

FIGURE 41—The BMW Paralever suspension system is shown here.
(Courtesy of BMW of North America, Inc.)

Rear-Suspension Maintenance

With proper factory-recommended maintenance performed at scheduled intervals, very little service and few repairs are necessary on today's modern motorcycle rear suspensions. Perhaps the most important maintenance factor—aside from maintaining the motorcycle's gas, oil, and air levels—is the proper lubrication of all moving parts (greasing the rods, links, bushings, joints, etc.) of the rear-suspension assembly.

Road Test 5

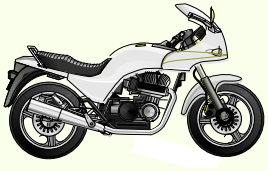

1. A _____ is used to mount the motorcycle's swing arm to the frame.
2. Rebuilding the swing arm usually consist of replacing the _____ or _____.
3. Is straightening a bent swing arm recommended?

   _____

4. Name the five types of motorcycle rear-suspension systems that use a single shock.

   _____

5. Match each suspension-system design from item # 4 to its motorcycle manufacturer.

   _____

Check your answers with those on page 64.

ATV FRAME AND SUSPENSION SYSTEMS

ATV Frames

ATV frames and chassis, although different in shape from motorcycle frames and chassis, are constructed of the same types of materials. As with motorcycle frames, not much repair or maintenance is necessary. If an ATV frame becomes bent or cracked, a frame-repair specialist should replace or repair it. Shown in Figure 42 is an exploded view of a typical 3-wheel ATV frame and chassis. A typical 4-wheel ATV frame is shown in Figure 43.

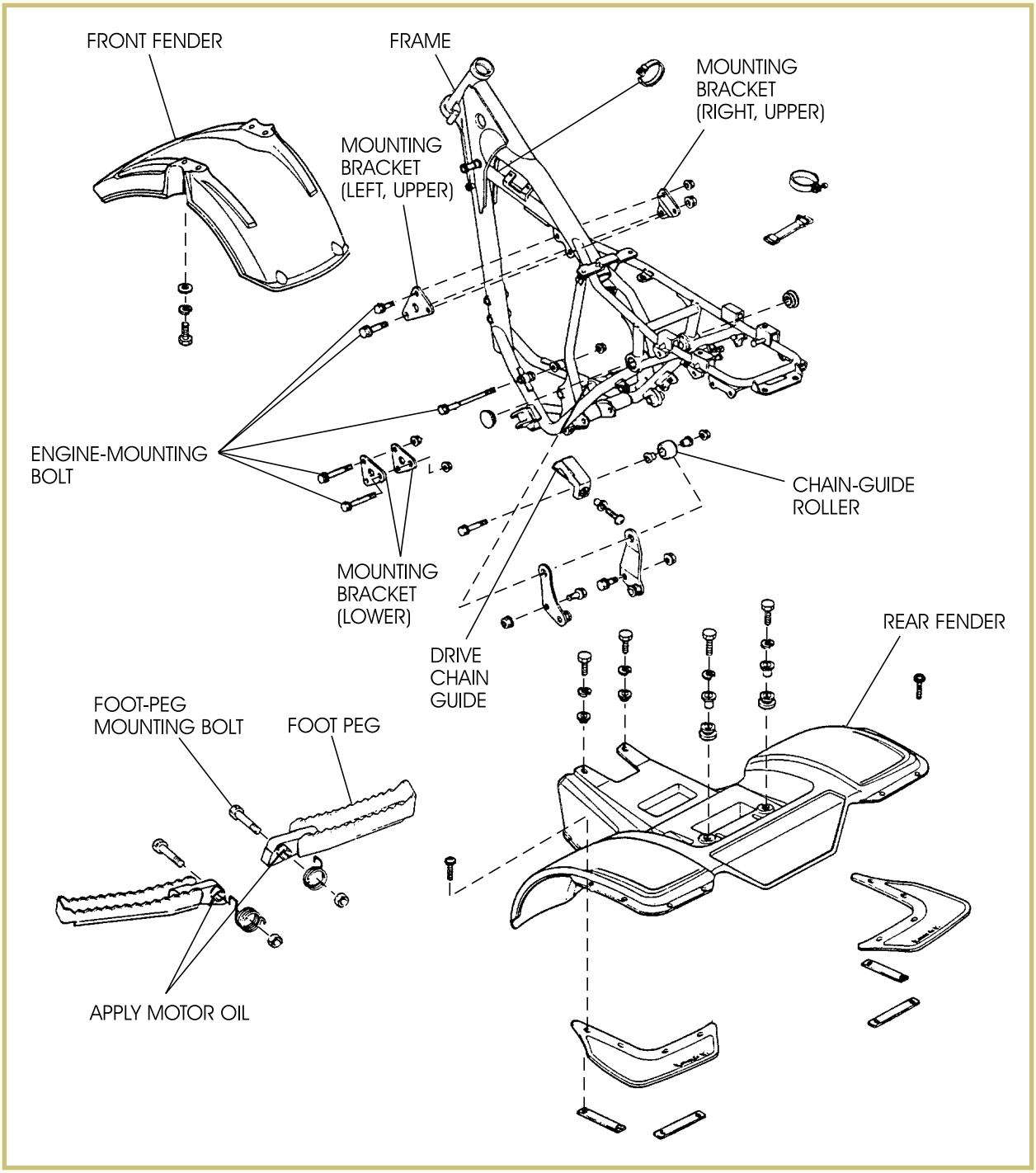

FIGURE 42—An exploded view of a typical 3-wheel ATV frame is shown here. (Courtesy Kawasaki Motor Corp., U.S.A.)

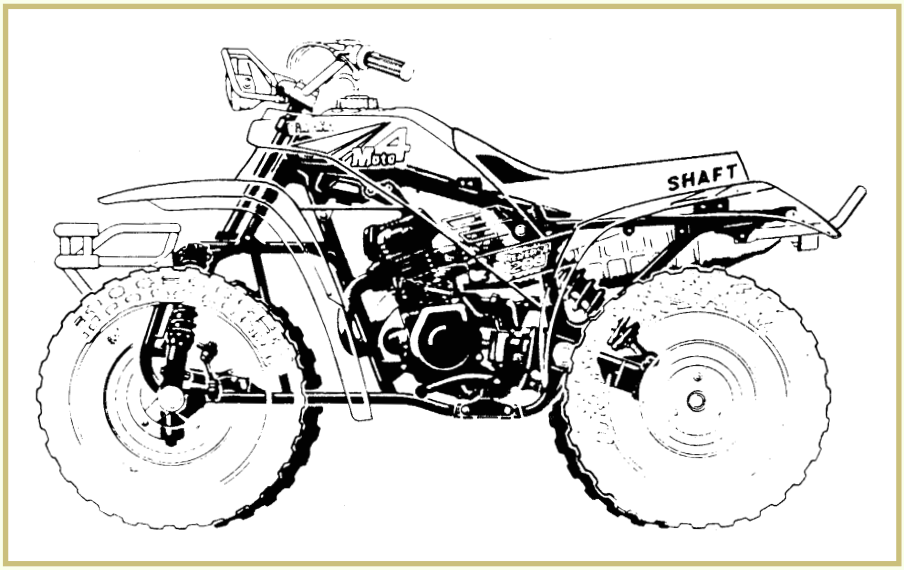

FIGURE 43—A Yamaha 4-wheel ATV frame is shown here. (Image courtesy of Yamaha Motor Corporation, U.S.A.)

3-Wheel ATV Front-Suspension and Steering Systems

As you can see in Figure 44, the front-steering-and-suspension systems of a 3-wheel ATV and a motorcycle are very similar. Figure 45 shows an exploded view of a typical front-steering-and-suspension assembly.

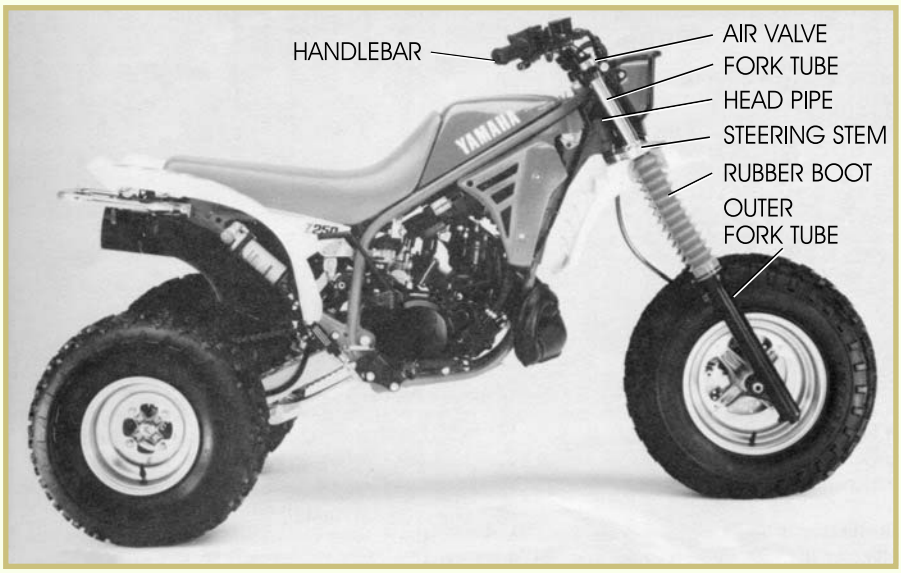

FIGURE 44—ATV and motorcycle front-suspension design are almost identical. (Image courtesy of Yamaha Motor Corporation, U.S.A.)

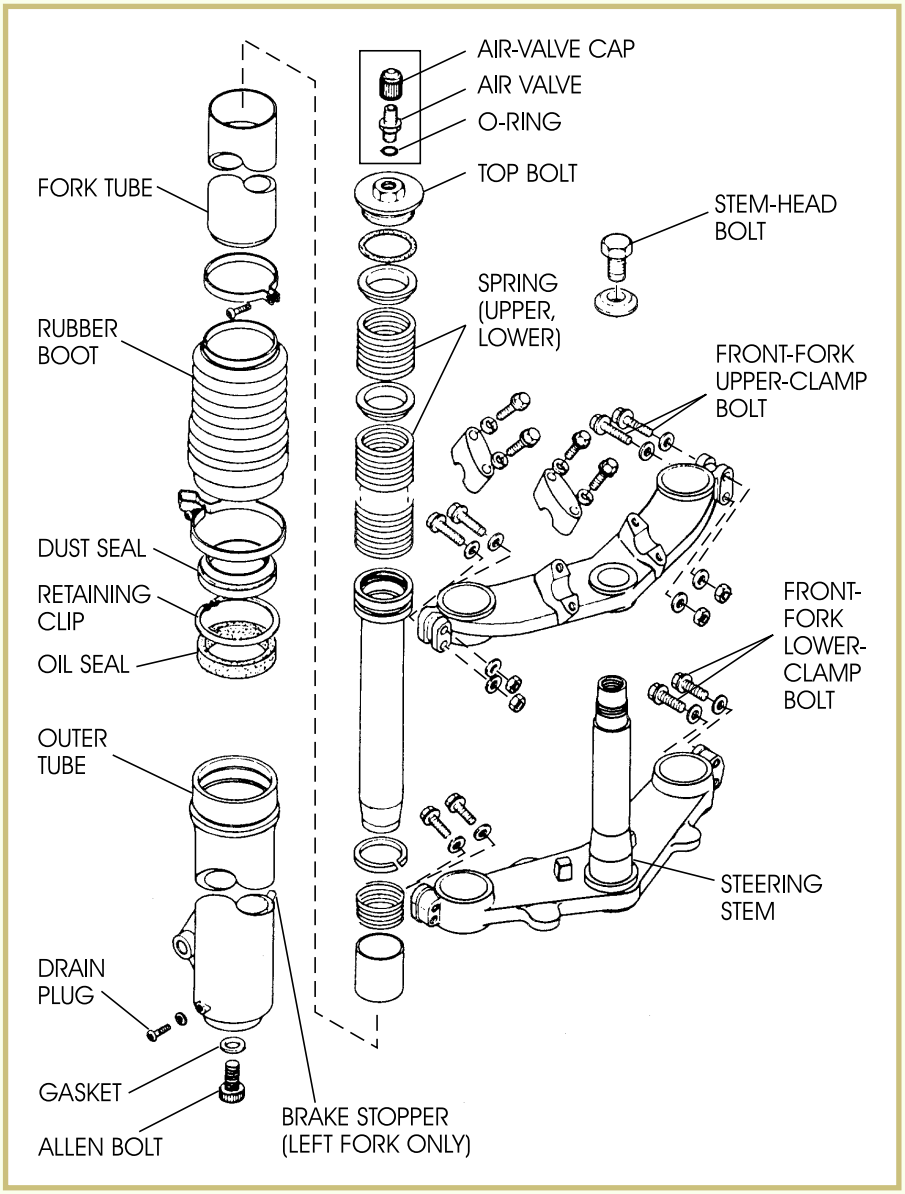

FIGURE 45—An exploded view of the component parts of an ATV front-suspension system is shown here. (Courtesy Kawasaki Motor Corp., U.S.A.)

Checking Steering Adjustment

To check the steering adjustment on a 3-wheel ATV, these steps should be generally followed:

1. Raise the front wheel from the ground. With the front wheel off the ground, the front end should move freely to either side when pushed lightly. (If it doesn't, the steering is too tight and needs to be adjusted.)
2. Hold each fork tube near the axle and try to move the tube back and forth. If you can feel any play, the steering is too loose.

Adjusting Steering

To adjust the steering on a 3-wheel ATV, follow these steps:

1. Remove the fuel tank, gauges, and headlight assembly.
2. Position a stand beneath the frame to raise the front wheel from the ground.
3. Loosen the four front-fork lower-clamp bolts and the steering stem-head bolt.
4. Once these bolts are loose, use the special stem-nut wrench to adjust the steering-stem locknut properly. If the steering is too loose or has play, tighten the locknut. If the steering is too tight, loosen the locknut.
5. Tighten the stem locknut after it's properly adjusted.
6. Tighten the stem-head bolt to the specified torque.
7. Use the proper amount of torque and tighten the front-fork lower clamp bolts.

Removing and Inspecting the Steering Bearings

If the correct steering adjustment can't be attained by the above procedures, remove and inspect the steering bearings. The stem-bearing components of a typical ATV are shown in Figure 46. To remove the steering-stem bearings,

1. Remove the fuel tank, front wheel, front-fork legs, headlight unit, handlebars, stem-head bolt, and steering-stem head.
2. Remove the bearings. Use the special stem-bearing remover to drive out the upper bearing race. Use the bearing puller and adapter for the lower race.
3. Clean and examine the bearings. If they show signs of pitting, wear, or damage, replace them. Both bearing-race surfaces must be smooth with no signs of pitting or excessive wear.
4. Pack the bearings and races with a high-quality grease. Always inspect the grease seal, located below the lower bearing. Replace this seal any time it shows signs of wear, deterioration, or damage.

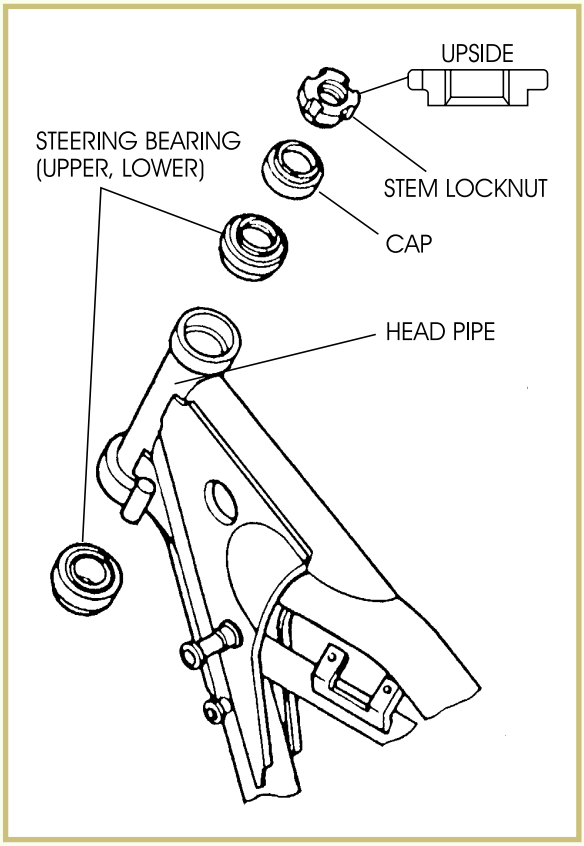

FIGURE 46—The steering-stem bearing components of an ATV are illustrated here. (Courtesy Kawasaki Motor Corp., U.S.A.)

Reinstalling the Outer-Bearing Races

To reinstall the outer-bearing races,

1. Use the special driver-press shaft and bearing drivers to drive the outer-bearing races into the head pipe until they stop at the stepped portion machined in the head pipe (Figure 47).
2. Use the special stem-bearing driver and adapter to install the tapered roller bearings on the steering stem.
3. Seat the bearings using the special stem-nut wrench.
4. Tighten the stem locknut to the specified torque.
5. Recheck the steering play and readjust, if necessary.

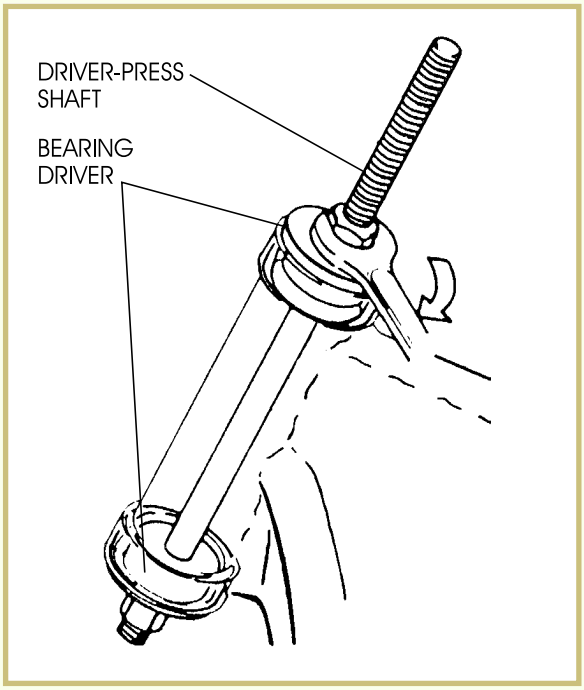

FIGURE 47—The installation of the steering-stem bearing races using a special tool is shown here. (Courtesy Kawasaki Motor Corp., U.S.A.)

Measuring Front-Fork Oil Level

Although the air pressure in the front forks is usually adjustable, the fork oil should be maintained at the specified level. To measure the front-fork oil level,

1. Expel any air in the oil by compressing the front fork. Do this by pushing down on the handlebars several times with the front brake fully applied.
2. Deflate the air pressure from the front-fork air valves.
3. Unscrew the top plugs and remove the main spring from each fork leg.
4. Keeping the forks fully compressed, use a tape measure or rod to measure the distance from the upper edge of each fork inner tube to the oil.
5. Compare this measurement with the factory service manual specification.

Changing Front-Fork Oil

If it's necessary to add fork oil, be sure to use the recommended grade, viscosity, and amount. Oil for the front forks must be changed at factory-recommended intervals. To change front-fork oil,

1. Deflate the front-fork air pressure.
2. Unscrew the front-fork plugs and drain the oil. Apply the front brake and push down on the handlebars several times to pump out all the oil.
3. Clean the drain plugs with solvent and blow them dry with compressed air.
4. Apply a nonpermanent locking agent to the drain-plug threads.
5. Using new gaskets, install new drain plugs and tighten them to the specified torque.
6. Unscrew the top plugs and remove the main springs from the fork legs.
7. Following the procedure discussed previously, refill each fork leg with the specified amount of oil.

Disassembling the Forks

To repair a bent fork tube or to replace the fork seals, the forks have to be disassembled. To disassemble,

1. Drain each fork leg of oil.
2. Remove the front brake, front wheel, and other related components.
3. After removing each fork leg, push the inner-fork tubes in all the way.
4. Using a special Allen wrench, an extension handle, and an adapter, remove the bottom Allen bolts.
5. With the inner- and outer-fork tubes separated, remove the retaining rings and dust seals. Use the special oil-seal puller to remove the oil seals.
6. Replace the oil seals and retaining rings. It's best to replace the oil seals and retaining rings any time the forks have been disassembled.
7. Install the new oil seals using the special oil-seal driver. Be sure to apply oil to the new seals before installing them.

Fork reassembly is basically the reverse of the disassembly. Be sure to apply a nonpermanent locking agent to the threads of the drain plugs, the Allen bolts, and the air valves.

4-Wheel ATV Front-Suspension and Steering Systems

Figure 48 shows a typical 4-wheel ATV front-suspension system. The most common 4-wheel ATV front-suspension system uses pivoting control arms suspended by coil-over shock absorbers. The service and repair of coil-over shocks will be covered later in this study unit in the section on rear suspension.

FIGURE 48—A four-wheel ATV front-suspension system is shown here.
(Image courtesy of Yamaha Motor Corporation, U.S.A.)

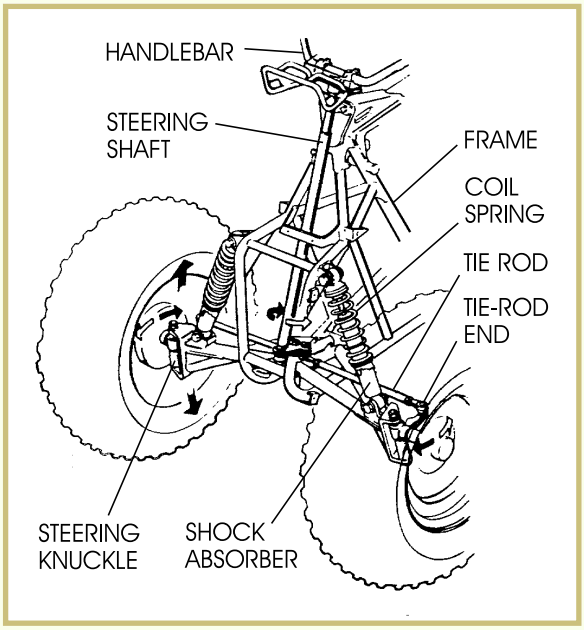

Servicing the Steering Shaft

To service the steering shaft,

1. Remove the seat, front carrier, gas tank, and front fenders.
2. Remove the handlebar cover and headlight body bracket bolts.
3. Remove the retaining ring, handlebar holder nuts, and handlebar.
4. Flatten the lock tab and remove the guide-holder bolts.
5. Remove the steering-shaft guides and O-rings.
6. Remove the under-guard from the frame.
7. Remove the cotter pins, tie-rod ends, and steering-shaft nuts.
8. Remove the steering shaft from the frame and determine whether it's bent and requires replacement.
9. Replace the steering-shaft guide and O-rings, if necessary.
10. Reinsert the steering shaft into the frame.

11. If there's any play, replace the shaft, bushings, and O-rings as required.

Servicing the Steering Knuckles

To service the steering knuckles of a 4-wheel ATV,

1. Remove the cotter pins and the knuckle-securing nuts.
2. Disconnect the knuckles from the frame.
3. Remove the brake-shoe plate.
4. Inspect the knuckles, thrust covers, bushings, and collar for wear or damage.
5. Insert the collar into the knuckle. If there's any play, replace the collar, thrust washers, and bushings as a set.
6. Check the tie-rod ends for movement or play.
7. Replace the tie-rod ends if there's any play or a rough spot.

Reassembling the Steering System

To reassemble the steering system,

1. Insert the tie-rod ends into the tie-rods, as shown in Figure 49.
2. Adjust the length of the tie-rod assembly to factory specifications by turning both tie-rod ends.
3. Apply a lithium-base grease to the thrust covers, collar, and bushings.
4. Insert the axle into the brake-shoe plate, and install the knuckle onto the frame.
5. Install the knuckle shaft, and tighten it to the proper torque specification.

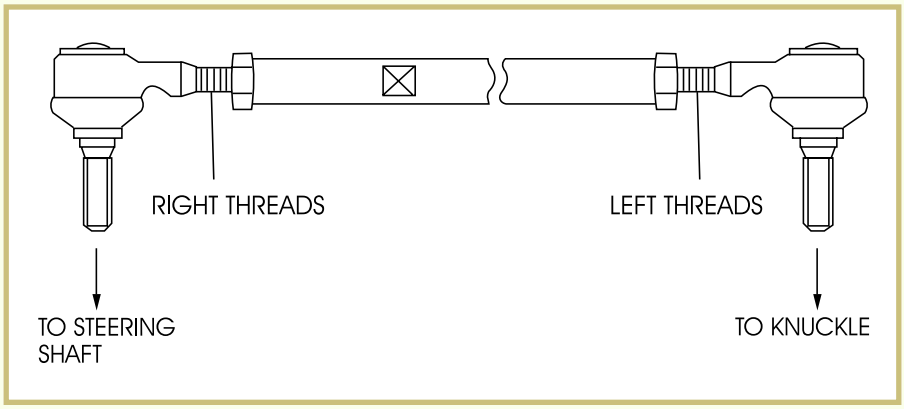

FIGURE 49—The tie-rod ends have both left and right threads. (Image courtesy of Yamaha Motor Corporation, U.S.A.)

6. Install the tie-rod ends onto the knuckles, and torque the nuts to the correct specification.
7. Replace all cotter pins.

Checking Tie-Rod Adjustment

Once the steering system is reassembled, check the tie-rod adjustment by following these steps:

1. Position the vehicle on a level surface and mark both front-tire tread centers.
2. Measure the width between the two marks.
3. Move the front tires 180° (½ of a full rotation) backward or forward.
4. Measure the width between the two marks again.
5. Compute the toe-in measurement. To compute the *toe-in* measurement, subtract one width measurement from the other (B minus A, as shown in Figure 50). (If the toe-in isn't 5 mm, turn both tie-rods by the same amount until the proper specification is attained.)
6. Tighten the tie-rod locknuts to the recommended torque specification, making sure the tie-rod end heads are flush with each other.

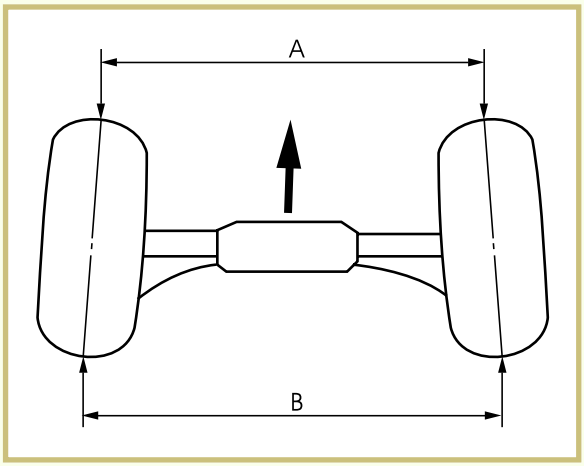

FIGURE 50—The measuring of toe-in is illustrated here. (Image courtesy of Yamaha Motor Corporation, U.S.A.)

ATV Rear Suspension

The rear suspensions of a 3-wheel ATV and a 4-wheel ATV are basically the same. The two types of suspension systems used are the single-shock rear suspension and the dual coil-over system. The single-shock system consists of a pivoted swing arm connected to a single coil-over shock absorber, mounted horizontally to the frame under the seat of the vehicle. A typical single-shock rear suspension is shown in Figure 51. Figure 52 shows an exploded view of the major components of a single-shock rear-suspension system.

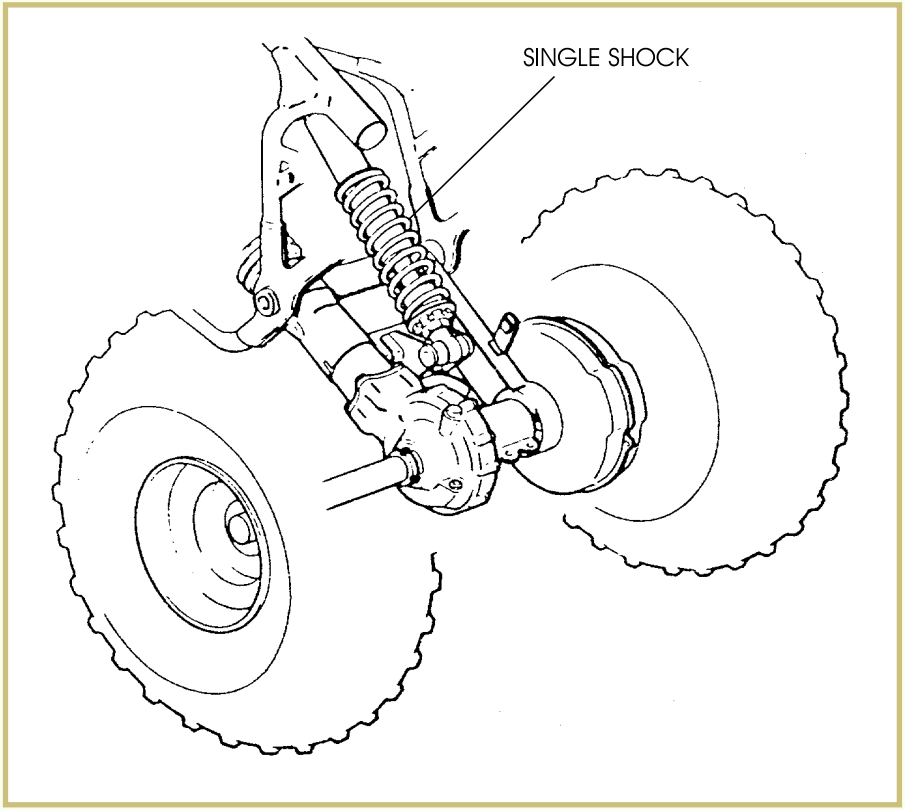

FIGURE 51—An ATV single-shock suspension system is shown here. (Image courtesy of Yamaha Motor Corporation, U.S.A.)

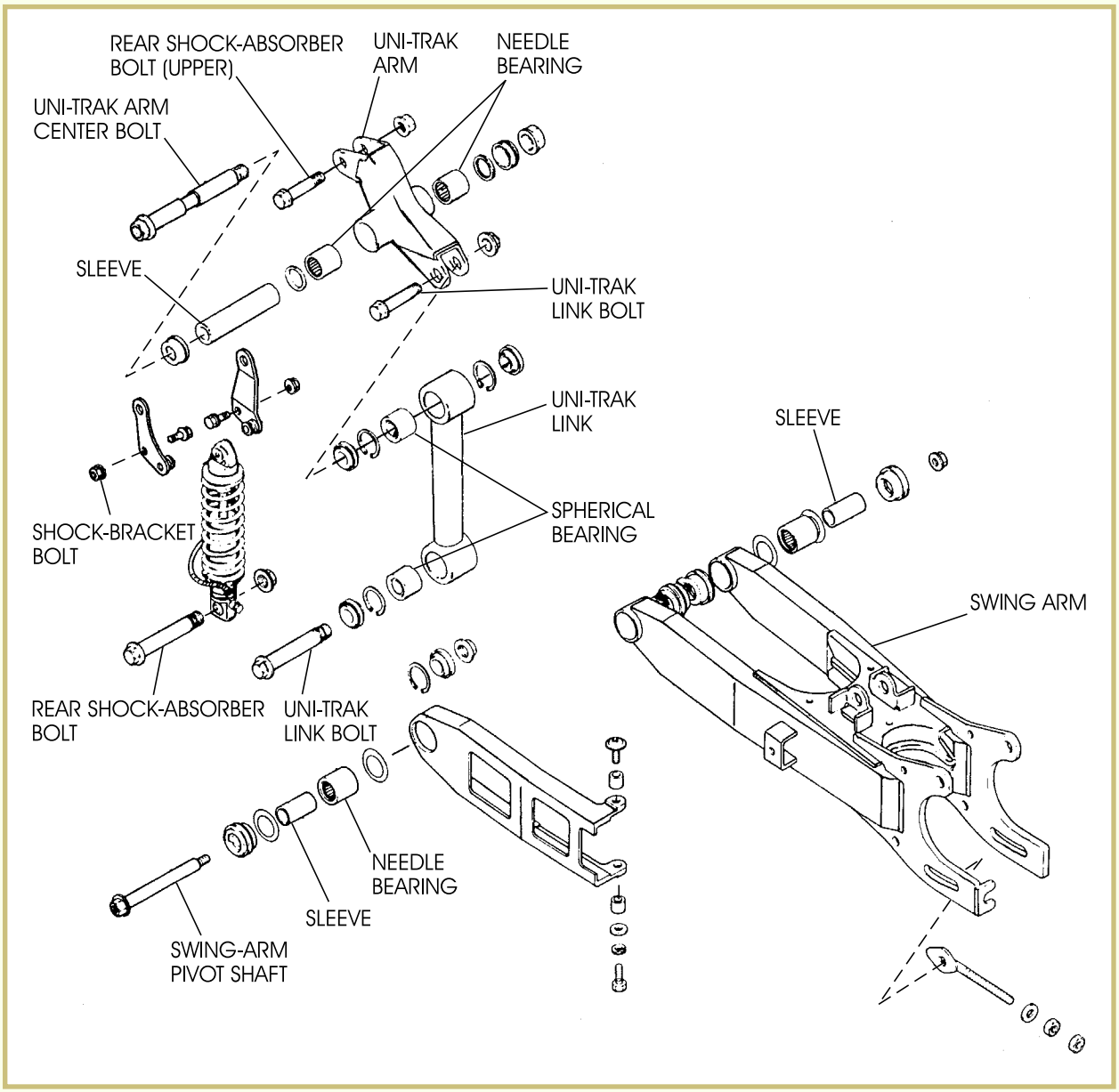

FIGURE 52—An exploded view of a single-shock ATV rear-suspension system is shown here. (Courtesy Kawasaki Motor Corp., U.S.A.)

A dual coil-over rear suspension consists of a pivoting swing arm suspended by two coil-over shock absorbers, mounted vertically to the rear of the frame. A typical dual coil-over rear suspension is shown in Figure 53. The shock-absorber rates and the coil-spring preload settings are adjustable on most coil-over shocks used on ATVs. There are usually four settings on the shock-absorber adjuster, with #4 being the strongest spring force.

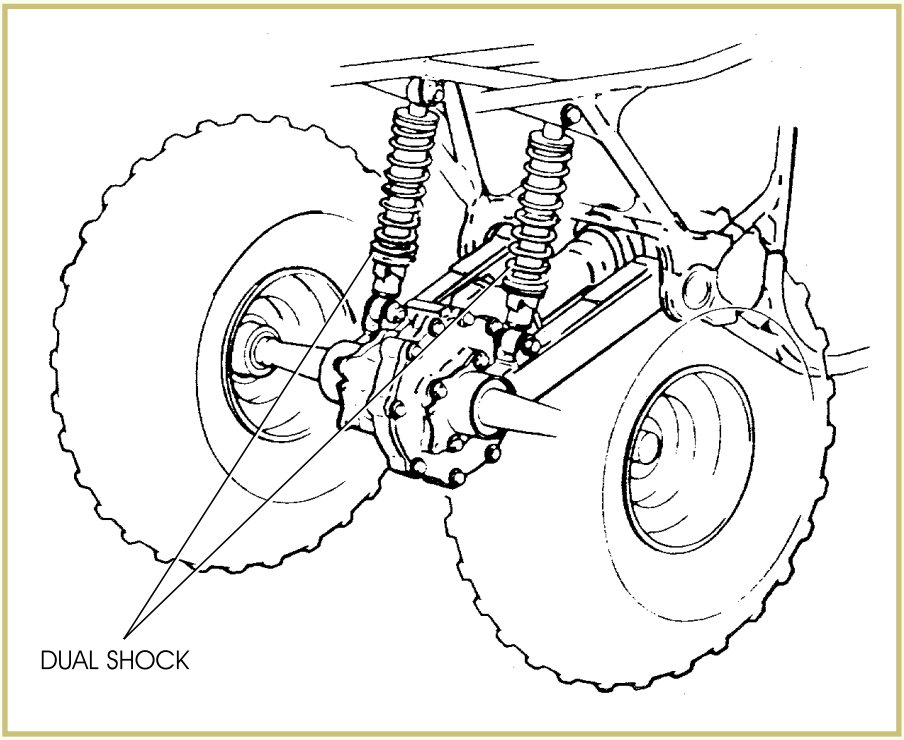

FIGURE 53—An ATV dual coil-over shock suspension system is shown here. (Image courtesy of Yamaha Motor Corporation, U.S.A.)

Adjusting the Damper

To adjust the damper,

1. Remove the rear fender.
2. Slide the dust cover from the top of the shock absorber.
3. Turn the damper adjuster to the desired number setting (until you feel a click).

Adjusting the Spring Preload

To adjust the spring preload,

1. Remove the shock absorber from the frame by first taking off the seat and rear fender.
2. Loosen the upper and lower shock-absorber mounting nuts, but don't remove them.
3. Position a stand beneath the vehicle so that the rear wheels are off the ground.
4. Remove the mounting bolts and nuts and the shock absorber.
5. Thoroughly clean the threads at the bottom of the shock absorber.

6. Clamp the lower portion of the shock in a vise, being careful to avoid damaging it.
7. Using the special hook wrenches, loosen the locknut and turn the adjusting nut while holding the upper mounting bracket. The spring preload becomes stronger as the adjusting nut is turned upwards.
8. Once the proper preload is set, tighten the locknut to the specified torque.

Some ATVs, as well as most off-road motorcycles, are equipped with the deCarbon-style, gas-pressurized shock absorbers that we discussed in an earlier section of this study unit. An exploded view of a typical deCarbon gas shock is shown in Figure 54.

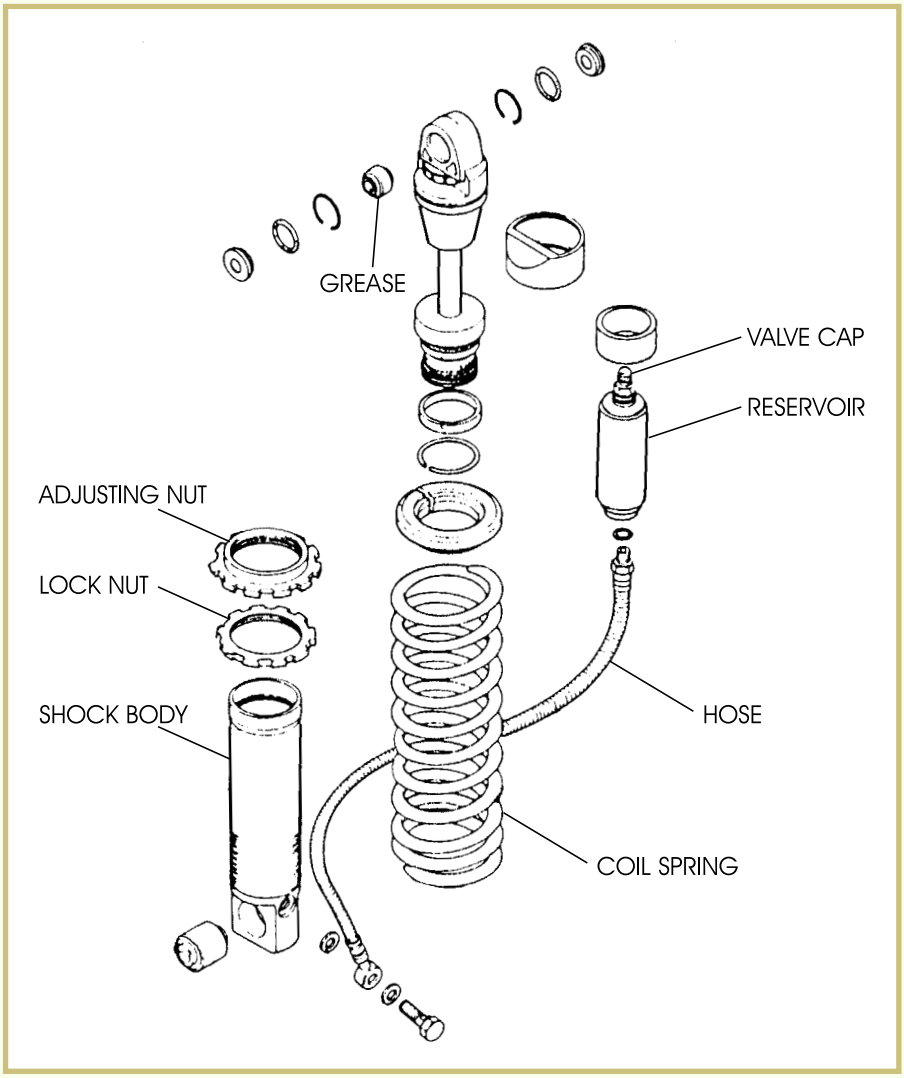

FIGURE 54—An exploded view of a deCarbon rear shock absorber on an ATV is shown here. (Courtesy Kawasaki Motor Corp., U.S.A.)

Changing deCarbon Shock-Absorber Oil

A deCarbon shock absorber usually requires that the shock oil be changed periodically. To change the oil in a gas-pressurized shock absorber,

1. Remove the shock and reservoir from the vehicle.
2. Remove the valve cap to release the nitrogen gas.
3. Once the gas has been released, clamp the lower part of the reservoir in a vise with aluminum *soft jaws*.
4. Remove the hose from the reservoir.
5. Empty the oil from the gas reservoir and shock-absorber body.
6. Refill the shock-absorber body with the specified amount of new oil
7. Bleed the air from the system by moving the shock's piston's shaft up and down, pushing the air bubble to the surface of the oil. Continue this action until all the air has surfaced and has been removed.
8. Connect the hose to the reservoir and tighten to the proper torque.
9. Inject nitrogen gas through the valve on the gas reservoir to the recommended pressure specification.
10. Reinstall the spring and readjust the spring preload.
11. Mount the shock absorber to the vehicle.

Road Test 6

1. If the frame of an ATV becomes bent or cracked, it should be

   _____

2. When adjusting the steering on an ATV, the _____, _____, and _____ should be removed first.

3. To remove and inspect the 3-wheeler ATV's steering-head bearing, which components should be removed?

   _____

4. Explain how to reinstall outer-bearing races into the ATV's head pipe.

   _____

5. When servicing the steering knuckles of a 4-wheel ATV, you must first remove the _____ and the _____.

Check your answers with those on page 63.

Road Test Answers

1

1. It's a brace that's used to reinforce the frame at high-stress points.
2. Engine displacement, its intended use (off-road, highway only), cost, visual appeal, materials
3. True
4. Single cradle
5. Backbone
6. It's an imaginary line that runs through the center of the front forks to the center of the space between the rear swing arm.

2

1. True
2. Excessive tire, chain, or sprocket wear, and the steering may pull to one side more than the other.
3. steering-stem head nut
4. True
5. rear-wheel alignment, front-fork straightness
6. swing arm

3

1. telescopic
2. oil
3. steering stem
4. Slider, lower fork legs
5. fork oil seal

4

1. 0.001 in. to 0.002 in.
2. dial indicator, V-blocks
3. Fork tubes, stem, bearings, bearing races
4. The fork stem determines front-wheel alignment and is unsafe if it's damaged.
5. Yes
6. Lighter weight produces a softer ride. Heavier weight produces a harder ride.

5

1. pivot shaft or pivot bolt
2. pivot bushings, bearings
3. No
4. Monocross, Uni-Track, Pro-Link, Full-Floater, Paralever
5. Yamaha, Kawasaki, Honda, Suzuki, BMW

6

1. replaced or repaired by a frame-repair specialist.
2. fuel tank, gauges, headlight assembly
3. Fuel tank, front wheel, front-fork legs, headlight assembly, handlebars, stem-head bolt, and steering-stem head
4. Drive them in using a special driver-press shaft and bearing drivers.
5. cotter pins, knuckle-securing nuts

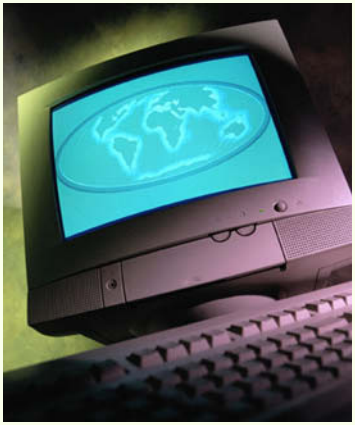

ONLINE EXAMINATION

For the online exam, you must use this

EXAMINATION NUMBER:

03301600

When you're confident that you've mastered the material in your studies, you can complete your examination online. Follow these instructions:

1. Write down the eight-digit examination number shown in the box above.
2. Click the **Back** button on your browser.
3. Click the **Take an Exam** button near the top of the screen.
4. Type in the eight-digit examination number.